ONSITE WASTEWATER TREATMENT SYSTEM REGULATION OF SUMMIT COUNTY COLORADO

These Regulations were originally adopted by the Board of Health on March 11, 1996 and subsequently amended on:

January 26, 1998,
June 8, 2000,
May 27, 2008 and
April 22, 2014 (effective July 1, 2014)

Summit County Board of Health

Karn Stiegelmeier*, Chair*

Thomas Davidson

Dan Gibbs

* * * * * * *

Summit County Public Health

Vision: Summit County is a safe and empowered community that maximizes quality of life.

Mission: The Public Health Department is dedicated to providing a variety of services for a safe and healthy environment, while strengthening our mountain community so that everyone thrives.

TABLE OF CONTENTS

		Page
SECTION 1	Declaration	4
SECTION 2	Definitions	5
SECTION 3	General Requirements and Prohibitions	24
SECTION 4	Permit Application Requirements and Procedures	29
SECTION 5	Board of Health Administrative Procedures	36
SECTION 6	Enforcement	41
SECTION 7	System Contractors and Owner installers	46
SECTION 8	System Cleaners	49
SECTION 9	Experimental Systems	52
SECTION 10	Use Permits	54
SECTION 11	Operating Permits	59
SECTION 12	Site Characterization and Design Requirements	64
SECTION 13	Wastewater Flow and Strength	75
SECTION 14	General Component Design Standards	79
SECTION 15	Septic and Dose Tanks	85
SECTION 16	Soil Treatment Areas	93
SECTION 17	Higher Level Treatment Systems	107
SECTION 18	Alternate Disposal Systems	113
SECTION 19	System Maintenance and Abandonment	119

APPENDICIES

A	Minimum Setbacks	123
B	Design Flow Rates (Wastewater flows & Strengths)	128
C	Guidelines for Distance Reductions (LTARs)	132
D	Treatment Level Options	134
E	Regulatory Citations and Third Party Standards	136

FIGURES

1	Typical Onsite Wastewater Treatment System	21
2,3	Subsurface Drain	102
4	Typical Retaining Wall	103
5	Typical Mound	110

	DECLARATION	**Section 1**

1.0 Declaration

In order to preserve the environment and protect the public health and water quality; to eliminate and control causes of disease, infection, and aerosol contamination; and to reduce and control the pollution of the air, land and water, the Summit County Board of Health declares it to be in the public interest to establish minimum standards and regulations for On-site Wastewater Treatment Systems (OWTS) in Summit County Colorado and to provide the authority for the administration and enforcement of such minimum standards and regulations.

1.1 Purpose

The purpose of these Regulations, as authorized by the OWTS Act, is to establish minimum standards for the location, design, construction, performance, installation, alteration and use of OWTS within Summit County Colorado, including but not limited to permit application requirements; requirements for issuing permits; the inspection, testing, and supervision of installed systems; the maintenance and cleaning of systems; the disposal of waste material and the issuance of cease and desist orders.

1.2 Authority

These Regulations are promulgated pursuant to the On-site Wastewater Treatment System Act, C.R.S. §25-10-101, et seq., and Regulation 43, adopted by the Colorado Water Quality Control Commission.

1.3 Applicability

These Regulations shall apply to all OWTS as defined in C.R.S. §25-10-103(12).

1.4 Severability and Savings Clause

The provisions of these Regulations are severable, and if any provisions or the application of the provisions to any circumstances are held invalid, the application of such provision to other circumstances, and the remainder of these Regulations shall not be affected thereby.

"Absorption system" means a leaching field and adjacent soils or other system for the treatment of sewage in an On-site Wastewater Treatment System by means of absorption into the ground. See *Soil treatment area*.

"Applicant" means a person who submits an application for a permit for an On-site Wastewater Treatment System.

"Bed" means a below-grade soil treatment area consisting of a shallow excavation greater than three feet wide containing distribution media and more than one lateral.

"Bedrock" means continuous rock that underlies the soil or is exposed at the surface. Bedrock is generally considered impervious, but if fractured or deteriorated, it may allow effluent to pass through without adequate treatment.

"Biochemical Oxygen Demand, Five-Day" (BOD5) means quantitative measure of the amount of oxygen consumed by bacteria while stabilizing, digesting, or treating biodegradable organic matter under aerobic conditions over a five-day incubation period; expressed in milligrams per liter (mg/L).

"Biochemical Oxygen Demand, Carbonaceous Five Day" (CBOD5) means quantitative measure of the amount of oxygen consumed by bacteria while stabilizing, digesting, or treating the organic matter under aerobic conditions over a five-day incubation period while in the presence of a chemical inhibitor to block nitrification; expressed in milligrams per liter (mg/L).

"Blasting" means the use of explosives or blasting agents.

"Board of Health" means the Board of Health of Summit County, Colorado, pursuant to C.R.S. §25-1-502.

"Building Sewer" means piping that conveys wastewater to the first system component or the sewer main.

"Carbonaceous Biochemical Oxygen Demand" See *Biochemical Oxygen Demand, Carbonaceous*.

"Cesspool" means an unlined or partially lined underground pit or underground perforated receptacle into which raw household wastewater is discharged and from which the liquid seeps into the surrounding soil. A septic tank that fails to hold water is considered a cesspool for the purposes of these regulations.

"Chamber" means an open, arch-shaped structure providing an open-bottom soil interface with permeable sidewalls used for distribution of effluent in a soil absorption system.

"Cistern" means a watertight, covered receptacle of nontoxic, food-grade material designed to store potable water.

"Cleaning" means the act of removing septage or other wastes from a wastewater treatment system component or grease/waste from a grease interceptor.

"Colorado Plumbing Code" means Examining Board of Plumbers Rules And Regulations (3 CCR 720-1).

"Commission" means the Water Quality Control Commission created by section 25-8-201, C.R.S.

"Competent technician" means a person designated by the Department who is able to conduct and interpret the results of soil profile test pit excavations, profile holes, percolation tests, and site evaluations.

"Component" means a subsection of an On-site Wastewater Treatment System; a component may include multiple devices.

"Composting toilet" means self-contained waterless toilet designed to decompose non-water-carried human wastes through microbial action and store the resulting matter for disposal.

"Consistence" means the degree and kind of cohesion and adhesion that soil exhibits and/or the resistance of soil to deformation or rupture under an applied stress.

"Covered transaction" means the transfer, sale, conveyance or change in ownership of any real property served by an onsite wastewater treatment system, excluding the following:

1) Change in ownership solely to include or exclude a spouse or children;

2) Transfer subject to life estate;

3) Transfer to effect foreclosure or forfeiture of real property, (does not include the subsequent sale of the foreclosed property after being titled to the foreclosing entity);

4) Transfer by redemption from a tax sale (does not include the subsequent sale of the property after being titled to the foreclosing entity)

5) Transfer creating or ending joint ownership if at least one person is an original owner of the property and / or his or her spouse or children;

6) Transfer of property containing premises that have been demolished or are otherwise uninhabitable;

7) Transfer for the vacation or granting of a public right of way;

8) Transfer from a person to a trust or to themselves as trustee(s) of a trust estate;

9) Properties with onsite wastewater treatment systems that have never been used;

10) New homes that have not yet been occupied, or

11) As otherwise determined by the Department.

"Crest" means the highest point on the side of a dry gulch or cut bank.

"Cut Bank" is where rapid degradation (natural or anthropogenic) of a hillside has exposed historic soil strata.

"Deep gravel system" means a soil treatment area for repairs only where the trenches utilize a depth of gravel greater than 6 inches below the distribution line and sidewall area is allowed according to a formula specified in these Regulations.

"Department" means the Summit County Public Health Department and its employees.

"Design" means

1) The process of selecting, sizing, locating, specifying, and configuring treatment train components that match site characteristics and facility use as well as creating the associated written documentation; and

2) Written documentation of size, location, specification and configuration of a system.

"Design capacity" See *Flow, Design.*

"Design flow" See *Flow, Design*.

"Designer, on-site wastewater treatment system" means a practitioner who utilizes site evaluation and investigation information to select an appropriate OWTS and prepares a design document in conformance with these Regulations.

"Distribution" means the process of conveying wastewater or effluent to one or more components, devices, or throughout a soil treatment area.

"Distribution box" means a watertight component that receives effluent from a septic tank or other treatment unit and distributes effluent via gravity in approximately equal portions to two or more trenches or two or more laterals in the soil treatment area.

"Division" means the division of administration of the department of which the Water Quality Control Division is a part.

"Domestic wastewater" See *Wastewater, domestic.*

"Domestic Wastewater Treatment Works" means a system or facility for treating, neutralizing, stabilizing, or disposing of domestic wastewater which system or facility has a designed capacity to receive 2,000 gallons of domestic wastewater per day or more. The term "domestic wastewater

treatment works" also includes appurtenances to such system or facility such as outfall sewers and pumping stations and to equipment related to such appurtenances but does not include industrial wastewater treatment plants or complexes whose primary function is the treatment of industrial wastes, notwithstanding the fact that human wastes generated incidentally to the industrial process are treated therein, per C.R.S. §25-8-103 (5)

"Dosing" means a high rate periodic discharge into a soil treatment area.

"Dosing, demand" means configuration in which a specific volume of effluent is delivered to a component based upon patterns of wastewater generation from the source.

"Dosing, pressure" means delivery of effluent under pressure to a component, device or to a soil treatment area for even distribution. Pressure dosing is distinguished from non-pressure dosing when a pump is used to create constant pressure from pump outlet to location of discharge within the STA. See also "Pressure distribution". (Example: Pressure dosing is capable of creating upward movement of water out of distribution piping.)

"Dosing, timed" means a configuration in which a specific volume of effluent is delivered to a component based upon a prescribed interval, regardless of facility water use.

"Dosing siphon" means a device used for demand dosing effluent; which stores a predetermined volume of water and discharges it at a rapid rate, from a tank at a given elevation to a component at a lower elevation, accomplished by means of atmospheric pressure and the suction created by the weight of the liquid in the conveying pipe.

"Dosing tank" means a tank, compartment or basin that provides for storage of effluent from a septic tank, or other treatment unit, intended to be delivered to a soil treatment area at a high rate periodic discharge.

"Drainfield" See *Soil treatment area*

"Dripline" or "Drip line" *See Drip tubing*

"Distribution, drip" means the application of effluent over an infiltrative surface via pressurized emitters and associated devices and parts (pump, filters, controls, and piping).

"Drip emitter" means a drip distribution device that dispenses effluent to the infiltrative surface at a predictable rate.

"Drip tubing" means small diameter flexible plastic tubing manufactured with emitters uniformly spaced along its length; See also *Drip emitter*.

"Drop box" means a device used for serial or sequential distribution of effluent by gravity flow to a lateral of a soil treatment area.

"Dry gulch" See *Gulch, dry*.

"Drywell" means an unlined or partially lined underground pit (regardless of geometry) into which drainage from roofs, basement floors, water softeners or other non-wastewater sources is discharged and from which the liquid seeps into the surrounding soil.

"Dwelling" means any building which is developed for people to live in, including attached structures such as garages, storage units and room additions but excluding deck column pads. Such deck column pads shall not be installed in an absorption area.

"Effective Size" means the size of granular media such that not more than 10 percent by weight of the media is finer than the size specified.

"Effluent" means the liquid flowing out of a component or device of an On-site Wastewater Treatment System.

"Effluent filter" See *Effluent screen*.

"Effluent line" means non-perforated pipe that conveys effluent from one On-site Wastewater Treatment System component to the next.

"Effluent screen" means a removable, cleanable (or disposable) device installed on the outlet piping of a septic tank for the purpose of retaining solids larger than a specific size and/or modulating effluent flow rate. An effluent screen may be a component of a pump installation. An effluent screen may also be installed following the septic tank but before higher level treatment components or a soil treatment area.

"Environmental health specialist" means a person trained in physical, biological, or sanitary science to carry out educational and inspectional duties in the field of environmental health.

"Evapotranspiration/absorption system" means an unlined On-site Wastewater Treatment component that uses evaporation, transpiration, and absorption for dispersal of effluent.

"Evapotranspiration system" means an On-site Wastewater Treatment component with a continuous, impermeable liner that uses evapotranspiration and transpiration for dispersal of effluent.

"Experimental system" means a design or type of system based upon improvements or development in the technology of sewage treatment that has not been fully tested.

"Failure" means damage to a system component, structural member or connection.

"Floodplain (100-year)" means an area adjacent to a stream which is subject to flooding as the result of the occurrence of a one hundred (100) year flood, and is so adverse to past, current or foreseeable construction or land use as to constitute a significant hazard to public or environmental health and safety or to property or is designated by the Federal Emergency Management Agency (FEMA) or National Flood Insurance Program (NFIP). In the absence of FEMA/NFIP maps, a professional engineer shall certify the flood plain elevations.

”Floodway” means the channel of a river or other watercourse and the adjacent land areas that shall be reserved in order to discharge the base flood without cumulatively increasing the water surface elevation more than one foot or as designated by the Federal Emergency Management Agency or National Flood Insurance Program. In the absence of FEMA/NFIP maps, a professional engineer shall certify the floodway elevation and location.

“Flow, daily” means the measured volume of wastewater generated from a facility in a 24-hour period expressed as gallons per day.

“Flow, design” means the estimated volume of wastewater per unit of time for which a component or system is designed. Design flow may be given in the estimated volume per unit such as person per unit time that shall be multiplied by the maximum number of units that a facility can accommodate over that time.

“Flow equalization” means a system configuration that includes sufficient effluent storage capacity to allow for regulated flow on a daily or multi-day basis to a subsequent component despite variable flow from the source.

“Flow equalizer” means an adjustment device to evenly distribute flow between outlets in a distribution box or other device that may be out of level.

“Grease interceptor tank” means a watertight device located outside a facility designed to intercept, congeal, and retain or remove fats, oils, and grease from sources such as commercial food-service that will generate high levels of fats, oils and greases.

“Grease trap” means a watertight device located inside a facility designed to intercept, congeal, and retain or remove fats, oils, and grease from sources such as commercial food-service that will generate high levels of fats, oils and greases.

“Ground water” means that part of the subsurface water that is at or below the saturated zone.

“Ground water surface” means the uppermost limit of an unconfined aquifer at atmospheric pressure, generally determined during the spring at peak snow melt. A good indication is when rivers are running at annual peak flows.

“Guidelines” means State Board of Health Guidelines on Onsite wastewater treatment systems, 5 CCR 1003-6 – predecessor of Regulation 43, On-site Wastewater Treatment System Regulation, 5 CCR 1002-43.

“Gulch, dry” means a deep, narrow ravine marking the course of an intermittent or ephemeral stream. Dry gulch to include, but not be limited to, a roadside ditch.

“Health officer” means the chief administrative and executive officer of a local public health agency, or the appointed health officer of the local board of health. “Health officer” includes a director of a local public health agency.

“Higher level treatment” means designated treatment levels other than Treatment Level 1.

“Higher level treatment unit” means a device or component designed, installed and operated for the purpose of producing higher level treatment.

“Individual sewage disposal system” means a term used for On-site Wastewater Treatment System in Colorado regulations from 1973 until 2013.

“Infiltrative surface” means the designated interface where effluent moves from distribution media or a distribution device into soil. For Mounds and Unlined Sand Filters, the infiltrative surface is the top of the sand (bottom of distribution media).

“Inspection port” means an access point in a system component that enables inspection, operation and/or maintenance.

“Invert” means elevation of the bottom of the inside pipe wall or fitting.

“**Landscape position”** means the specific geomorphic component of the landscape in which a site is located; two-dimensional landscape positions may be summit, shoulder, backslope, sideslope, footslope, or toeslope; three dimensional views of geomorphic landscape position can be described as headslope, noseslope, sideslope, base slope, etc.

“Lateral” means pipe, tubing or other conveyance used to carry and distribute effluent.

“Leach field” See *Soil treatment area*.

“Limiting condition” or “Limiting layer” means a layer with low permeability, ground water surface or other condition that restricts the treatment capability of the soil.

“Limited occupancy” means the occupancy of a structure or dwelling as a residence on less than a full-time, year round basis, i.e. no more than 90 consecutive days or a total occupancy of 120 days per year.

“Liner” means an impermeable synthetic material used to prevent or restrict infiltration and/or exfiltration. Such material, where required, must be of at least .03 inch (30 mil) or equal.

“Long-term acceptance rate” (LTAR) means design parameter expressing the rate that effluent enters the infiltrative surface of the soil treatment area at equilibrium, measured in volume per area per time, e.g. gallons per square foot per day (gal/ ft2/day).

“Major remodel” means the manipulation of an existing dwelling which includes the addition of a bedroom or new living space.

“Malfunction” means the condition in which a component is not performing as designed or installed.

“Manufactured media” See *Media, manufactured*.

“Media” means solid material that can be described by shape, dimensions, surface area, void space, and application.

“Media, manufactured” means a synthetic media for distribution such as polystyrene blocks or beads or plastic grids.

“Media, treatment” means non-or slowly-degradable media used for physical, chemical, and/or biological treatment in an On-site Wastewater Treatment System component.

“Mound” means an above-grade soil treatment area designed and installed with at least 24 inches of clean sand between the bottom of the infiltrative surface and the original ground elevation; that utilizes pressure distribution and includes a final cover of suitable soil to stabilize the surface and support vegetative growth.

“Nitrogen reduction” means a minimum 50 percent reduction of influent nitrogen strength which is the minimum objective of NSF/ANSI Standard 245 - Wastewater Treatment Systems - Nitrogen Reduction.

“Onsite Wastewater System” or **“OWS”** means a term used for On-site Wastewater Treatment System in Summit County regulations from 2008 until 2014.

“On-Site Wastewater Treatment System” or **"OWTS"** and, where the context so indicates, the term **"system"** means an absorption system of any size or flow or a system or facility for treating, neutralizing, stabilizing, storing or dispersing sewage generated in the vicinity, which system is not a part of or connected to a sewage treatment works.

“Operating Permit” means a renewable permit that addresses specific operation and/or maintenance requirements for an existing OWTS that includes mechanical or electrical treatment components, or a system that is designed to meet specific wastewater treatment levels as set forth in these Regulations.

“OWTS Act” means the On-site Wastewater Treatment System Act, C.R.S. §25-10-101, et seq.

“Owner” means the owner of record of a property.

“Percolation test” means a subsurface soil test at the depth of a proposed absorption system or similar component of an OWTS to determine the water absorption capability of the soil, the results of which are normally expressed as the rate at which one inch of water is absorbed. The rate is expressed in minutes per inch.

“Performance standard” means minimum performance criteria for water quality and operation and maintenance established by the regulatory authority to ensure compliance with the public health and environmental goals of the state or public health agency.

“Permeability” means the property of a material which permits movement of water through the material.

"Permit" means a document authorizing the construction or alteration, installation, repair and use of an On-site Wastewater Treatment System.

"Person" means an individual, partnership, firm, corporation, association, or other legal entity and also the State, any political subdivision thereof, or other governmental entity.

"Pit privy" See "Privy".

"Potable spring" means a spring used to provide drinking water.

"Pressure distribution" means application of effluent over an infiltrative surface via pressurized orifices and associated devices and parts (including pump, filters, controls, and piping). Pressure distribution is distinguished from non-pressured distribution when a pump is used to create constant pressure from pump outlet to location of discharge within STA. See also "Dosing, pressure".

"Privy" means an above grade structure allowing for the disposal of excreta not transported by a sewer and which provides privacy and shelter and prevents access to the excreta by flies, rodents, or other vectors. Pit privies have an unlined excavation for disposal of excreta; vaulted privies have a water-tight concrete receptacle to hold excreta until removed for disposal. Vault privies and pit privies are On-site Wastewater Treatment Systems.

"Professional engineer" means an engineer licensed in accordance with C.R.S. §12-25-1.

"Professional geologist" means a person who is a graduate of an institution of higher education which is accredited by a regional or national accrediting agency, with a minimum of thirty semester (forty-five quarter) hours of undergraduate or graduate work in a field of geology and whose post-baccalaureate training has been in the field of geology with a specific record of an additional five years of geological experience to include no more than two years of graduate work as set forth in C.R.S. §23-41-208, and C.R.S. §34-1-201.

"Proprietary product or technology" means a manufactured component or other product that is produced by a private person. It may be protected by patent, trademark or copyright.

"Public domain technology" means a system that is assembled on location from readily available components and is based on well-established design criteria and is not protected by patent, trademark or copyright.

"Public water system" means a system that provides potable water that is approved and regulated by the State Health Department.

"Redoximorphic" means a soil property that results from the reduction and oxidation of iron and manganese compounds in the soil after saturation with water and subsequent desaturation.

"Regulation 43" means the On-Site Wastewater Treatment System Regulation of the State of Colorado (5 CCR 1002-43).

“Remediation system” means a treatment system, chemical/biological additive or physical process that is proposed to restore the soil treatment area of an OWTS to good performance.

“Restrictive layer” means horizon or condition in the soil profile or underlying strata that restricts movement of fluids. A restrictive layer may constitute a limiting soil/site condition.

“Riser” means a watertight vertical cylinder and lid allowing access to an OWTS component for inspection, cleaning, maintenance, or sampling.

“Rock-plant filter” means a designed system which utilizes treatment media and various wetland plants to provide treatment of wastewater through biological, physical, and chemical processes. Also called a constructed wetland.

“Sand filter” means a system that utilizes a layer of specified sand as filter and treatment media and pressure distribution.

“Sand filter, lined” means a sand filter designed for higher level treatment that has an impervious liner and under-drain below the sand layer. Lined sand filters may be intermittent / single pass where the effluent is distributed over the sand bed a single time before distribution to a soil treatment area, or recirculating where part of the effluent is returned to an earlier component for additional treatment before distribution to a soil treatment area.

“Sand filter, unlined” means a layer of sand used as a sand filter without a liner between the sand and the existing soil on which it is placed.

“Seepage pit” means an excavation deeper than it is wide that receives septic tank effluent and from which the effluent seeps from a structural internal void into the surrounding soil through the bottom and openings in the side of the pit.

“Septage” means a liquid or semisolid that includes normal household wastes, human excreta, and animal or vegetable matter in suspension or solution generated from a residential septic tank system. Septage may include such material issued from a commercial establishment if the commercial establishment can demonstrate to the Division that the material meets the definition for septage set forth in this subsection. Septage does not include chemical toilet residuals.

“Septic tank” means a watertight, accessible, covered receptacle designed and constructed to receive sewage from a building sewer, settle solids from the liquid, digest organic matter, store digested solids through a period of retention, and allow the clarified liquids to discharge to other treatment units for final disposal. Dosing tank capacity is not to be considered septic tank capacity.

“Sequential distribution” means a distribution method in which effluent is loaded into one trench and fills it to a predetermined level before passing through a relief line or device to the succeeding trench. The effluent does not pass through the distribution media before it enters succeeding trenches.

"Serial distribution" means a distribution method in which effluent is loaded into one trench and fills it to a predetermined level before passing through a relief line or device to the succeeding trench. The effluent passes through the distribution media before entering succeeding trenches which may be connected to provide a single uninterrupted flow path.

"Service provider" means a person engaged in the business of servicing and maintaining higher-level treatment units. Service providers must have training relative to the specific system to be maintained or certification by the equipment manufacturer, if available, and hold a current NAWT Operation and Maintenance credential (Parts 1 and 2), or equivalent. Employees of a service provider need not hold this credential.

"Sewage" means a combination of liquid wastes that may include chemicals, house wastes, human excreta, animal or vegetable matter in suspension or solution, and other solids in suspension or solution, and that is discharged from a dwelling, building, or other establishment. See also "Wastewater".

"Sewage treatment works" has the same meaning as "domestic wastewater treatment works" under C.R.S. §25-8-103.

"Site evaluation" means a comprehensive analysis of soil and site conditions for an OWTS.

"Site evaluator" means a practitioner who conducts preconstruction site evaluations, including visiting a site and performing soil analysis, a site survey, or other activities necessary to determine the suitability of a site for an OWTS.

"Slit trench latrine" means a temporary shallow trench for use as disposal of non-water-carried human waste.

"Soil" means

1) Unconsolidated mineral and/or organic material on the immediate surface of the earth that serves as a medium for the growth of plants and can potentially treat wastewater effluent;

2) Unconsolidated mineral or organic matter on the surface of the earth that has been subjected to and shows effects of:

    a. Pedogenic and environmental factors of climate (including water and temperature effects) and

    b. Macro and microorganisms, conditioned by relief, acting on parent material over a period of time.

"Soil evaluation" means a percolation test, soil profile, or other subsurface soil analysis at the depth of a proposed soil treatment area or similar component or system to determine the water absorption capability of the soil, the results of which are normally expressed as the rate at which one inch of water is absorbed or as an application rate of gallons per square foot per day.

"Soil horizon" means layers in the soil column differentiated by changes in texture, color, redoximorphic features, bedrock, structure, consistence, and any other characteristic that affects water movement or treatment of effluent.

"Soil morphology" means:

1) Physical constitution of a soil profile as exhibited by the kinds, thickness, and arrangement of the horizons in the profile; and by the texture, structure, consistence, and porosity of each horizon; and

2) Visible characteristics of the soil or any of its parts.

"Soil profile hole" means a hole dug or drilled near a proposed soil treatment area to evaluate soil type and to locate bedrock or ground water, if present. Observations of soil cuttings may be made.

"Soil profile test pit excavation" means a trench or other excavation used for access to evaluate the soil horizons for properties influencing effluent movement, bedrock, evidence of seasonal high ground water, and other information to be used in locating and designing an On-site Wastewater Treatment System.

"Soil structure" means the naturally occurring combination or arrangement of primary soil particles into secondary units or peds; secondary units are characterized on the basis of shape, size class, and grade (degree of distinctness).

"Soil texture" means proportion by weight of sand, silt, and clay in a soil.

"Soil treatment area" or **"STA"** means the physical location where final treatment and dispersal of effluent occurs. Soil treatment area includes drainfields and drip fields.

"Soil treatment area, alternating" means final treatment and distribution component that is composed of two soil treatment areas that are independently dosed.

"Soil treatment area, sequencing" means a soil treatment area having more than two sections that are dosed on a frequent rotating basis.

"Spring" means groundwater seeping out of the earth where the water table intersects the ground surface, typically with a developed bed or channel. See also "Potable Spring"**.**

"State" means the State of Colorado.

"State health department" means the Colorado Department of Public Health and Environment.

"State Waters" has the meaning set forth under C.R.S. §25-8-103.

"Strength, wastewater" means the concentration of constituents of wastewater or effluent; usually expressed in mg/L.

“Subsurface Drain” means a trench constructed upgradient of an absorption area for the collection and diversion of water away from an absorption area.

“Suitable soil” means a soil which will effectively treat and filter effluent by removal of organisms and suspended solids before the effluent reaches any highly permeable earth such as joints in bedrock, gravels, or very coarse soils and which meets percolation test or soil test pit excavation requirements for determining long-term acceptance rate and has a vertical thickness of at least four feet below the bottom of the soil treatment area unless the treatment goal is met by other performance criteria.

“Suspended-growth process” means a method of wastewater treatment wherein the microorganisms responsible for treatment are maintained in suspension within the wastewater.

“Systems cleaner” means a person engaged in and who holds himself or herself out as a specialist in the cleaning and pumping of On-site Wastewater Treatment Systems and removal of the residues deposited in the operation thereof. Systems cleaners must be licensed by the Department.

“Systems contractor” means a person engaged in and who holds himself or herself out as a specialist in the installation, renovation, and repair of On-site Wastewater Treatment Systems. Systems contractors must be licensed by the Department.

“Total suspended solids” means a measure of all suspended solids in a liquid; typically expressed in mg/L.

“Treatment media” See *Media, treatment.*

“Treatment level” or “TL” means defined concentrations of pollutants to be achieved by a component or series of components of an OWTS.

“Treatment unit” means a component or series of components where solids or pollutants are removed from wastewater or effluent from a preceding component.

“Trench” means:

1) A below-grade soil treatment area consisting of a shallow excavation with a width of 3 feet or less containing distribution media and one lateral; and

2) An excavation for placement of piping or installation of electrical wire or conduit.

“Uniformity coefficient” means a value which is the ratio of D60 to D10 where D60 is the soil diameter of which 60 percent of the soil weight is finer and D10 is the corresponding value at 10 percent finer. A soil having a uniformity coefficient smaller than 4 would be considered "uniform" for purposes of these Regulations.

“Use permit” means a document issued by the Department for a covered transaction or major remodel, approving the continued use of an existing onsite wastewater treatment system.

"Use Permit Inspector" means a person engaged in the business of inspecting onsite wastewater treatment systems. A use permit inspector must be NAWT or NSF-certified onsite wastewater inspector, or equivalent.

"Vault" means a watertight, covered receptacle, which is designed to receive and store water-carried wastewater from a building sewer, or from a privy, and is accessible for the periodic removal of its contents. If the vault is intended to serve a structure or structures that are projected to generate a domestic wastewater flow of two thousand gallons per day or more at full occupancy, the vault is a domestic wastewater treatment works. Vaults are On-site Wastewater Treatment Systems.

"Vault privy" see "Privy".

"Visual and tactile evaluation of soil" means determining the properties of soil by standardized tests of appearance and manipulation in the hand.

"Volume, effective" means the amount of effluent contained in a tank under normal operating conditions; for a septic tank, effective volume is determined relative to the invert of the outlet; for a dosing tank, effective volume under normal conditions is determined relative to the invert of the inlet and the control off level.

"Wastewater, domestic" means combination of liquid wastes (sewage) which may include chemicals, household wastes, human excreta, animal or vegetable matter in suspension or solution, or other solids in suspension or solution which are discharged from a dwelling, building or other structure. This term includes human waste generated in the absence of a structure.

"Wastewater, high strength" means

1) Influent having BOD5 greater than 300 mg/L; and/or TSS greater than 200 mg/L; and/or fats, oils, and grease greater than 50 mg/L entering a pretreatment component (as defined by NSF/ANSI Standard 40 testing protocol); and
2) Effluent from a septic tank or other pretreatment component that has BOD5 greater than 170 mg/L; and/or TSS greater than 60 mg/L; and/or fats, oils, and grease greater than 25 mg/L and is applied to an infiltrative surface.

"Wastewater pond" means a designed pond which receives exclusively domestic wastewater from a septic tank and which provides an additional degree of treatment.

"Water Quality Control Commission" See *Commission*.

"Water Quality Control Division" See *Division*.

"Water supply" means the type and source of the water supply for a building site that may consist of a well, public water system or a cistern.

"Well" means any excavation that is drilled, cored, bored, washed, fractured, driven, dug, jetted or otherwise constructed for the acquisition of groundwater for beneficial use, including infiltration galleries permitted as wells by the Division of Water Resources.

“Wetland, constructed” See *Rock-plant filter.*

“Wetlands” means those areas that are inundated or saturated by surface or groundwater at a frequency and duration sufficient to support, and that under normal circumstances do support, a prevalence of vegetation typically adapted for life in saturated soil conditions. Wetlands generally include swamps, marshes, bogs and similar areas.

ABBREVIATIONS AND ACRONYMS

AASHTO	American Association of State Highway and Transportation Officials
ANSI	American National Standards Institute
ASTM	American Society for Testing and Materials
BOD	Biochemical Oxygen Demand
C.R.S.	Colorado Revised Statutes
CBOD	Carbonaceous Biochemical Oxygen Demand
CCR	Code of Colorado Regulations
CSA	Canadian Standards Association
EPA	United States Environmental Protection Agency
GPD	Gallons Per Day
IAPMO	International Association of Plumbing and Mechanical Officials
ISDS	individual sewage disposal system (former term)
LTAR	Long-term Acceptance Rate
Mg/L	milligrams per liter
MPI	Minutes Per Inch
NAWT	National Association of Wastewater Technicians
NPCA	National Precast Concrete Association
NSF	National Sanitation Foundation
O&M	Operation and Maintenance
OWTS	On-site Wastewater Treatment System (current term)
SC	Summit County
STA	Soil Treatment Area
TL	Treatment Level
TN	Total Nitrogen
TSS	Total Suspended Solids
UL	Underwriters' Laboratories
USFS	United States Forest Service

Figure 1
Typical Onsite Wastewater
Treatment System

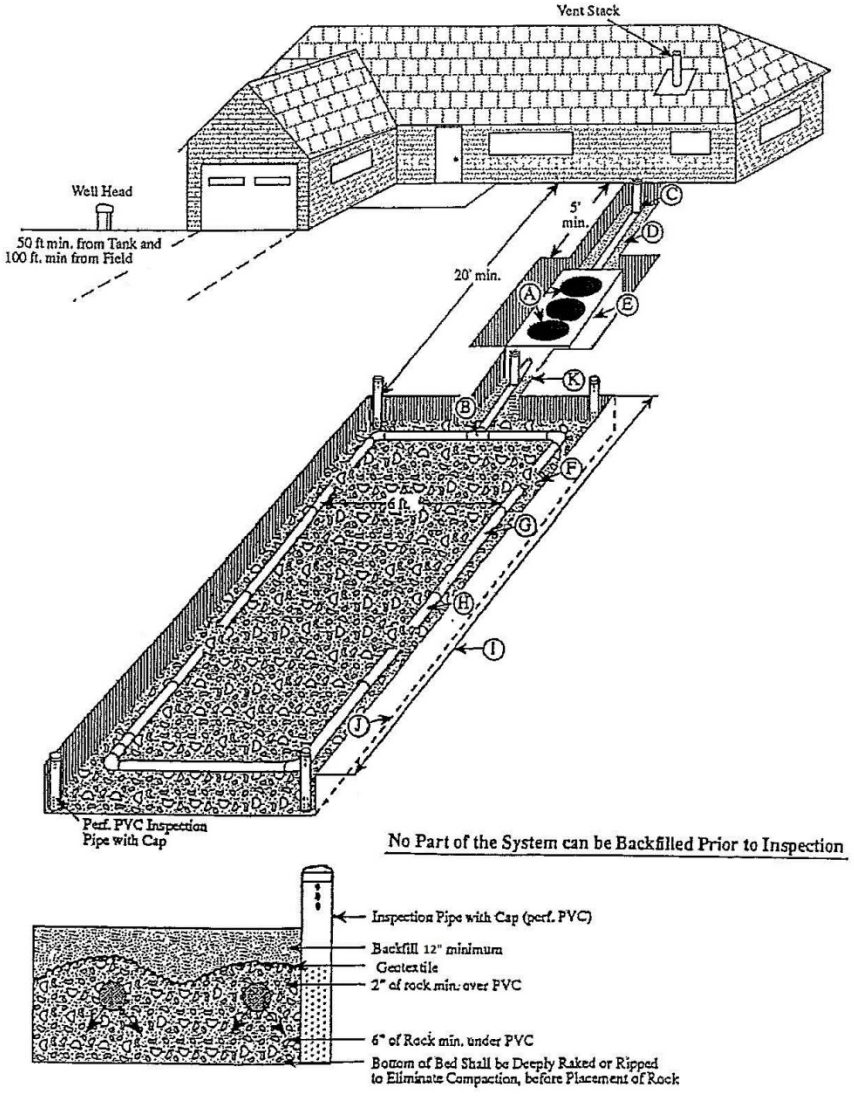

Typical Onsite Wastewater Treatment System

Figure 1
Typical Onsite Wastewater
Treatment System

A. Manhole lids shall extend to, or above, final grade. (Section 15)

B. Manifold set level. (Section 16)

C. Clean out piping within five (5) feet of house and every 100 feet. (Section 14)

D. At least one-quarter (1/4) inch per foot (2 percent) fall. Last five (5) feet shall not exceed four (4) percent. Pipe shall be properly bedded. (Section 14)

E. Three-compartment tank or two (2) tanks in series, set level. (Section 15)

F. Clean, graded distribution media six (6) inches below and two (2) inches above distribution piping. (Section 16)

G,H. Perforated piping in distribution media set level and no more than six (6) feet apart. (Section 16)

I. Soil Treatment Area piping shall not exceed one hundred (100) feet for non pressure dosed systems or one hundred fifty (150) feet for pressure dosed systems. (Section 16)

J. Soil Treatment Area's Infiltrative Surface should be kept at depth of soil evaluated and installed in same area as soils evaluated. Variations from this shall be approved by the Department. (Section 12)

K. Clean out piping adjacent to the dosing compartment for systems utilizing a siphon. (Section 14)

This Page Intentionally Left Blank.

3.0 General Requirements

A. Wastewater shall only be discharged in accordance with the minimum requirements of the Colorado Water Quality Control Commission, this regulation or other applicable authority for the subject land such as the USFS.

B. The owner of any structure where people live, work, or congregate, shall ensure that the structure is connected to an approved OWTS or a sewage treatment works.

C. A permit shall be required for the expanded use of an OWTS. Expanded use may include, but not be limited to increasing bedrooms in a dwelling and/or customers to a business. The OWTS shall be replaced or modified to handle the increased design flow and final approval given by the Department.

D. OWTS Technologies must either be public domain, including but not limited to rock and pipe distribution systems, sand filters with pressure distribution and mound systems, with criteria for design, installation, maintenance and use as described in this regulation, or proprietary products that have received Division review and acceptance according to Section 43.13 of Regulation 43, before Summit County Public Health may permit them for use.

3.1 Design Capacity

A. An OWTS with design capacity less than 2,000 gpd shall comply with these Regulations and the OWTS Act, which shall govern all aspects of OWTS permits, performance, location, construction, alteration, installation, and use.

B. An OWTS with design capacity equal to or greater than 2,000 gpd shall comply with these Regulations, site location and design approval in C.R.S. §25-8-702, and the discharge permit requirements in the Water Quality Control Act, C.R.S. §25-8-501, et seq. Applicable Commission regulations include, but are not limited to, the following:

1. Regulation 22 - Site Location and Design Approval Regulations for Domestic Wastewater Treatment Works (5 CCR 1002-22).

2. Regulation 41 - The Basic Standards for Ground Water (5 CCR 1002-41).

3. Regulation 42 - Site-Specific Water Quality Classifications and Standards for Ground Water (5 CCR 1002-42).

4. Regulation 61 - Colorado Discharge Permit System Regulations (5 CCR 1002-61).

5. Regulation 62 - Regulations for Effluent Limitations (5 CCR 1002-62).

C. For systems equal to or greater than 2,000 gpd, the Division is also authorized to determine those parts of this regulation identified as the prerogative of the local public health agencies.

D. The requirements for maintenance and standards of performance for systems equal to or greater than 2,000 gpd shall be determined by the site application approval and discharge permit.

3.2 Discharge to State Waters

A. Any system that will discharge into surface waters shall be designed by a professional engineer. The discharge permit application shall be submitted for preliminary approval to the Board of Health.

B. Once approved by the Board of Health, the application shall be submitted to the Water Quality Control Division for review in accordance with the Water Quality Control Act, C.R.S §25-8-101, et seq., and all applicable regulations of the Water Quality Control Commission. Compliance with such a permit shall be deemed full compliance with these Regulations.

3.3 Inspections and Right-of-Entry

A. For the purpose of inspecting and enforcing applicable regulations and the terms and conditions of any permit issued and investigating and responding to complaints, the Department is authorized to enter upon private property at reasonable times and upon reasonable notice for the purpose of determining whether or not an operating OWTS is functioning in compliance with the OWTS Act and these Regulations and the terms and conditions of any permit issued, and to inspect and conduct tests in evaluating any permit application. The owner or occupant of every property having an OWTS shall permit the Department access to the property to make inspections, conduct required tests, take samples, and monitor compliance.

B. If access is denied, the Department may apply to the Summit County District Court for an order authorizing entry.

3.4 Septage Disposal

All persons shall dispose of septage removed from an OWTS at an approved site and in an approved manner.

3.5 Surface Activity

A. Activity or use on the surface of the ground over any part of the OWTS shall be restricted to that which shall allow the system to function as designed, will not require irrigation or watering, and which shall not contribute to compaction of the soil or to structural loading detrimental to the integrity or capability of the component to function as designed.

B. During construction, equipment shall be kept off of the ground surface above the soil treatment area and out of the excavation to prevent compaction. If compaction occurs, the disturbed or compacted soil shall be re-evaluated and new percolation tests may be performed to the disturbed or compacted soil and the system redesigned if the parameters have changed.

3.6 General Prohibitions

A. No person shall construct or maintain any dwelling or other occupied structure which is not equipped with adequate facilities for the sanitary disposal of wastewater.

B. No OWTS shall be located, constructed, installed, altered or repaired prior to the issuance of a permit by the Department. Minor repairs, such as replacing a damaged pipe, replacing a pump, etc. may be authorized by the Department without the issuance of a permit, provided that the repair work shall comply with all other aspects of these Regulations. The Department may require an inspection of the repair work.

C. No city, county, or city and county shall issue to any person:

   1. A permit to construct or remodel a building or structure that is not serviced by a sewage treatment works until the Department has issued a permit for an OWTS.

   2. An occupancy permit for the use of a building that is not serviced by a sewage treatment works until the Department makes a final inspection of the OWTS, provided for in C.R.S. §25-10-106 (1) (h), and the Department approves the installation.

D. No person may connect more than one dwelling, commercial, business, institutional or industrial unit to the same OWTS unless such multiple connection was specified in the application submitted and in the permit issued for the system.

E. No new cesspools, pit privies or slit trench latrines may be constructed.

F. No person shall continue using an existing cesspool or slit trench latrine.

G. No OWTS permit shall be issued to any person when the subject property is located within a municipality or special district that provides public sewer service, except where such sewer service to the property is not feasible in the determination of the municipality or special district, or the permit is otherwise authorized by the municipality or special district.

H. No new or expanded OWTS shall be installed in a 100-year floodplain unless it meets or exceeds the requirements of the Federal Emergency Management Agency and the local emergency agency. Repairs of an existing system shall meet the requirements as feasible. The system as approved by the Department shall be designed to minimize or eliminate infiltration of floodwaters into the system and discharge from the system into the floodwaters.

I. No new or expanded OWTS shall be installed in a floodway designated in a 100-year floodplain. For any system repair that may affect the floodway delineation, appropriate procedures shall be followed including revision of the floodway designation, if necessary.

3.7 Materials Incorporated by Reference

A. Throughout these Regulations, standards and requirements by outside organizations have been adopted and incorporated by reference. The materials incorporated by reference cited herein include only those versions that were in effect as of June 30, 2013 and not later amendments to the incorporated material.

B. Materials incorporated by reference are available for public inspection during normal business hours from the Colorado Department of Public Health and Environment, Water Quality Control Division, 4300 Cherry Creek Drive South, Denver, Colorado 80246. Copies may be purchased from the source organizations.

This Page Intentionally Left Blank.

4.0 Applicability

Prior to installing, altering, or repairing an OWTS, the owner shall obtain a permit from the Department.

4.1 Minimum Application Requirements

A. The following forms and documents shall accompany an application for a permit to install an OWTS:

1. An application form that includes:

   a. Applicant name and contact information;

   b. Owner name and contact information;

   c. Property address and directions;

   d. Property legal description;

   e. Type of permit and use of structure to be served by the system;

   f. Report from Site and Soil Evaluation (Section 12);

   g. System design with a legible, accurate site plan no larger than 11 x 17 inches which shows pertinent physical features on subject property, and on adjacent properties, as noted in Appendix A, Table A-1. Design must note that it is in compliance with the most recent OWTS regulation adopted by the SC BOH; and

   h. Other information, data, plans, specifications and tests as required by Department.

2. When specific evidence suggests undesirable soil conditions exist, additional hydrological, geological, engineering or other information may be required to be submitted by the applicant. This requirement shall not prejudice the right of the Department to develop its own information from its own source at its own expense.

3. Fees

   a. All appropriate fees shall accompany an OWTS permit application.

   b. Twenty-three dollars ($23.00) must be collected for each permit issued for a new, repaired, or upgraded OWTS. Of that fee, the local public health agency shall retain three dollars ($3.00) to cover the Summit County Public Health's administrative costs and twenty dollars ($20.00) shall be transmitted to the state treasurer, who shall deposit that sum in the water quality control fund created in C.R.S section 25-8-502(1)(c).

B. The application shall expire and become void one year from the date of approval unless a permit is issued.

4.2 Minimum Building Site Size Requirements

The minimum lot size for installation of an OWTS in new subdivisions (including splitting of existing parcels) shall be determined as required by Chapter 8 of the Summit County Land Use and Development Code as amended from time to time. For parcels located within a municipal boundary, the minimum lot size shall be determined by that jurisdictions code.

4.3 Site and System Identification

A. Before applying for an OWTS permit, the owner or applicant shall ensure the following:

1. The site shall be marked at the primary road access by a sign not less than two feet square showing the property address.

2. The following shall be marked by labeled stakes with an exposed height of not less than two feet:
   a. Property corners, and
   b. Soil treatment area corners, and
   c. Tank, and
   d. House, and
   e. Well (when applicable).

4.4 Easements

A. If geologic or topographic constraints limit the installation of an OWTS on a building site, components of the proposed system may be located on contiguous properties in such a manner that conforms to these Regulations.

B. In support of the above, an easement agreement shall be prepared and submitted for approval by the Department prior to the issuance of a permit and shall include all of the following:

1. A survey from a professional land surveyor establishing the perimeter of the easement, such that a minimum setback of at least 10 feet shall be maintained from all system components to be located in the easement;

2. Written provisions for the installation of and perpetual maintenance, repair and use of the OWTS components located within the easement;

3. A statement that the agreement is applicable to current and any future owners;

4. Any other information required by the Department.

C. Upon approval by the Department, the agreement shall be executed by the owners of the dominant and serviant estates subject to the easement agreement and recorded with the Summit County Clerk and Recorder.

4.5 Preliminary Site Investigation

A. After receiving a permit application the Department shall conduct a preliminary site

investigation consisting of:

1. An inspection of the property; and

2. An assessment of the general topographical, hydrologic and geologic conditions of the property and surrounding area, including the observation of a soil profile test pit excavation; and

3. An assessment of the suitability of the proposed OWTS, including the ability of the proposed OWTS to meet all applicable setbacks as indicated in Table A-1.

B. When specific evidence indicates that subsurface conditions exist that may endanger State waters, the Department may require the applicant to submit additional hydrological, geological or engineering information.

C. If inspector is unable to located property due to inadequate signage, or if features required to be marked in Section 4.3.A.2 are not identified, applicant will be subject to extra inspection fees.

D. The Department may limit initial site inspections when unable to safely and accurately evaluate the site due to unfavorable weather and/or snow on the ground.

4.6 Application Review and Permit Issuance

A. If the Department determines that the application and supporting design complies with these Regulations and the OWTS Act; and applicable fees have been paid, the Department shall issue a permit to install the proposed system.

B. The permit shall set forth the conditions relating to the installation, operation and maintenance of the system, including, but not limited to, effluent testing, cleaning or maintenance schedules, or other special conditions.

C. Unless specifically addressed in a permit condition, installation of an OWTS shall otherwise be governed by all aspects of these Regulations.

D. Permit and Department approved design shall be kept on the job site and be available to the Systems Contractor during the construction or treatment of the OWTS until final inspection approval has been given by the Department.

E. The permit shall expire and become void one year from the date of approval unless the system has been installed and given final approval by the Department.

1. If construction has not begun prior to the expiration date, and owner desires to have the permit extended, the Department may renew the permit for one year. After 24-months from initial permit issuance, permit expires and applicant must apply for the permit to be reissued. Application must include an updated design when OWTS Regulations have changed. Reissuing permit will be subject to a new on-site inspection and fees as allowed in the latest SCEH fee schedule.

2. If construction and associated inspections have occurred, yet the job will not be completed prior to the expiration of the permit, the Department may approve renewal and reissuance of the permit as allowed in 4.6.E.1. When regulations have changed and the permitted

system not longer meets current regulations, the department shall require any uninstalled portions to be compliant with the regulations applicable at the time the permit renewal/reissuance is being reviewed. Permit renewal/reissuance fees shall be required as allowed in the latest SCEH fee schedule.

This requirement is applicable to:

a. Construction permits issued after July 1, 2014, and

b. Existing construction permits that were issued prior to July 1, 2014 and have not been given final approval. For these permits, owners have until July 1, 2015, to receive final approval of the system. After July 2, 2015, renewal and reissuance requirements described in 4.6.E.2 shall be required.

4.7 Denial of a Permit

A. If the Department determines that the proposed system does not comply with these Regulations, the Department shall deny the application and provide written notice to the applicant and include the reasons. Denial shall include one of the following conditions:

1. The subject property is located within a municipality or special district which provides public sewer service, except where such sewer service to the property is not feasible in the determination of the municipality or the special district.

2. Sewage treatment works are within four hundred (400) feet of the property line, unless applicant seeks and receives administrative relief consistent with the provisions of the Summit County Development Code (as applicable) and one of the following conditions are met:
   a. Provision of 4.7.A.a above are met, or

   b. Permit is minor type including tank replacement, sewer line work, etc., or

   c. Well permit requires discharge of wastewater to an OWTS.

3. In the determination of the Department, the issuance of such a permit would create a health hazard to any person or would be detrimental to the public health, safety and general welfare.

4. Any portion of the application does not meet the Summit County OWTS Regulations or OWTS Act.

B. Denial shall become final upon the expiration of time for filing an appeal under Section 5.3, or when the final action is taken upon an appeal, whichever is later.

4.8 Changes in Plans or Specifications

Any change in plans or specifications for the OWTS after the permit has been issued shall be submitted to the Department for review and approval; otherwise the permit will become invalid.

4.9 Change in Terms or Conditions after Permit Issuance

A. A permit shall become invalid if any construction or other material change (on or off-site) would cause the installation of the permitted system to violate these Regulations or any permit condition.

B. The permit shall become invalid if it is determined that material information contained in the application, engineering design or supporting documentation is incorrect, false or misleading.

C. Allegations regarding encroachment of system components onto adjacent properties shall be supported by a survey or similar documentation provided by the owner of that property showing the extent of the encroachment and shall be made prior to the final approval of the system. Allegations made after final approval has been given shall be considered to be civil matters between the parties involved.

D. Allegations regarding a lack of compliance with other applicable regulations, laws, ordinances or bylaws that are brought to the attention of the Department prior to issuing final approval of the system may be considered after written evidence is presented for review.

4.10 Inspections

A. During the installation of the OWTS the following shall be inspected and approved by the Department:

1. All system components with proper bedding and prior to backfilling, and

2. Dosing mechanism shall be observed to operate properly by the Department, and

3. Final grading and revegetation.

B. The owner shall be responsible for providing the Department with sufficient notice to perform all inspections required by the permit.

C. The owner shall assure reasonable and safe access for the inspection of any excavation required in the installation of the permitted system. For the purpose of these Regulations, a ladder is not considered reasonable and safe access.

D. If during the installation of the system an inspection reveals any significant departure from the design of the permitted system or change in the proposed water supply, or if any aspect of the system fails to comply with these Regulations, the Department shall notify the contractor of the deficiencies.

E. Engineer Certification of Installations

1. For systems designed by an engineer (Section 12.12), the design engineer shall certify that the system was constructed in accordance with the permitted design.

2. Failure to provide the required certifications shall result in denial of the final approval of the system.

3. If the design engineer is deceased, no longer a practicing engineer, or is otherwise unable to provide such certifications, the Department may waive the required certifications provided that the installation of the system complies with all aspects of these Regulations other than the certifications.

F. If upon final inspection the Department finds the system is installed in accordance with these Regulations and the permit conditions, the Department shall:

1. Approve the completed system; and

2. Develop or receive an as-built drawing of the installed system. As built shall identify the system contractor.

G. No OWTS shall be used without a final inspection by the Department, unless otherwise approved by the Department.

H. During times of the year when snow accumulation limits the ability of the Department to accurately evaluate final grading and revegetation, the Department may be unable to issue final system approval until the snow is removed or melts. In these cases, if the Contractor must verify that the work has been completed per the approved design and these Regulations. The Department may then approve occupancy until a final inspection can be done after the snow has melted provided that:

1. The remaining work to be inspected is not critical to the short term operation of the OWTS, and

2. The owner is notified to complete any remaining work identified after the snow melts but no later than the next July 1.

4.11 Disclaimer

A. The issuance of any permit under these Regulations does not constitute a guarantee, warranty or representation by the Board of Health, the Environmental Health Specialist, or the Department that the permitted OWTS will operate properly or that the system will not fail.

B. The issuance of any permit and specifications of terms and conditions therein shall not constitute assumption of liability, nor create a presumption that the Department or its employees may be liable for the failure or malfunctioning of any system. Permit issuance shall not constitute a certification that the system, the equipment used in the system, or any component used for system operation will ensure continuous compliance with the provisions of these Regulations or the OWTS Act, or any terms and conditions of a permit.

This Page Intentionally Left Blank.

5.0 Variance Procedure from the Requirements Of These Regulations

A. Requirements for Variance Consideration

1. Variances from these Regulations may be considered for legally created parcels where a conforming OWTS cannot be developed.

2. The Board of Health shall conduct a public hearing at a regularly scheduled meeting prior to rendering a decision on a variance request. The hearing must be the subject of a public notice or notice must be sent via certified mail, with a minimum 20-day reply time from the date of mailing, to all adjacent property owners.

3. Variances requesting a reduction in the setback distance from a soil treatment area to a well, surface water, ditches, wetlands or similar physical features shall incorporate TL2N technology. Current and future owners must maintain a maintenance agreement, with an appropriate provider, and an Operating Permit with the Department for the life of the system.

4. The Board of Health shall limit the number of bedrooms proposed per residential unit to a maximum of three (3) Bedrooms.

5. Variance requests must be accompanied by:

   a. Site-specific request identifying the specific criteria from which a variance is being requested;

   b. Technical justification by a professional engineer or professional geologist, which indicates the specific conditions which exist and/or the measures which will be taken that support a finding that the variance will result in no greater risk than that associated with compliance with the requirements of the regulation. Examples of conditions which exist, or measures which might be taken, include but are not limited to the following: evidence of a natural or manmade physical barrier to the movement of effluent to or toward the feature from which the variance is requested; placement of a manmade physical barrier to the movement of effluent to or toward the feature from which the variance is requested; soil replacement with sand filter media to reduce the infiltration rate of the effluent such that the travel time of the effluent from the absorption field to the physical feature is no less than the travel time through the native soils at the prescribed setback and Treatment Level 2;

   c. A discussion of alternatives considered in lieu of the requested variance;

d. Technical documentation for selected alternative, which may include a testing program, which confirms that the variance does not increase the risk to public health and to the environment; and

e. Applicant must demonstrate that all of the following findings have been met:

   i. The property cannot accommodate a conforming OWTS.

   ii. The property cannot merge with an adjacent property to create a single property which that is able to accommodate a conforming OWTS.

   iii. The variance is not being requested in order to mitigate an error in construction involving any element of property improvements.

   iv. The variance does not grant a special privilege or use.

   v. The variance is not being requested solely for economic gain.

   vi. The variance, if issued, will not result in a setback reduction to an offsite physical feature that does not conform to the minimum setbacks defined in Appendix A of this regulation without the written consent of the owner of the property containing said feature. Property lines are considered offsite features.

   vii. The variance will not reduce the separation to ground water or bedrock based on the level of treatment in Table 16-3.

   viii. The variance will not impact wetlands, unless reasonable use of the property is not otherwise available without granting a variance. In these cases, the variance being granted is the minimum necessary to allow for reasonable use and the variance must be approved by the local governing agency and the US Army Corp of Engineers (as applicable).

   ix. The variance for a horizontal setback from a well is consistent with the variance requirements of the Board of Examiners of Water Well Construction and Pump Installation Contractors.

   x. The strict application of the Regulations would result in peculiar and exceptional practical difficulties to, or exceptional and undue hardship upon, the property owner because of the special circumstances or extraordinary or exceptional physical conditions applicable to the property.

f. A statement of the hardship that creates the necessity for the variance.

g. Applicable fees.

6. The applicant has the burden of proof to demonstrate that the variance is justified and will pose no greater risk to public health and the environment than would a system meeting the regulations.

B. The local board of health has the authority to impose site-specific requirements and conditions on any variance granted.

C. Variances for Repair of Failing Systems

1. Public Notice Requirement

   a. When a proposed variance for a system repair or upgrade would result in encroachment on minimum distances to physical features on neighboring properties required in Appendix A, the hearing procedures and public notice requirements outlined in section 5.0.A.2, must be followed.

   b. Variances only involving a reduction to a physical feature on the subject property do not require public notice as outlined in section 5.0.A.2.

2. For the repair of an existing system, the new system must meet the requirements of this regulation. Where lot size and existing physical features prevent adherence to this regulation a variance may be requested. The repairs shall incorporate higher level treatment technology, and associated Operating Permit, to maximize separation distances as allowed for in these regulations. Variances requesting setbacks no closer than existing setbacks do not have to provide technical justification from a professional engineer or professional geologist. When an OWTS was installed after 1973 without a permit, the procedures outlined in section 5.0.A must be followed.

3. For dwelling units, the Board of Health shall limit the number of bedrooms proposed to three (3) unless applicant can demonstrate that the property had been previously approved for more bedrooms.

D. Outcome of the Variance Proceeding

1. The applicant must be notified, in writing, of the Board of Health's decision regarding the request for a variance. A notice of a denial of a variance must include those reasons which form the basis for the denial. The notice of an approval of a variance must include any conditions of the approval. The variance, and any conditions thereof, must be recorded on the deed to the property and any expenses associated with that recording must be the responsibility of the party obtaining the variance.

5.1 Prohibition of System Installation in Unsuitable Areas

A. The Board of Health may conduct a public hearing to consider a prohibition on the issuance of on-site wastewater treatment system permits for defined areas in which the local Board of Health determines that construction and use of additional OWTS may constitute a hazard to public health or water quality.

B. The hearing may be conducted after mailing a written notice to all affected property owners as shown in the records of the County Assessor and publishing a legal notice in a newspaper of general circulation at least ten (10) days prior to the hearing.

5.2 Hearing Procedures

Public hearings conducted pursuant to this section shall provide an opportunity for all interested persons to present relevant testimony or evidence in accordance with policies adopted by the Board of Health. At the conclusion of such hearing, the Board of Health may deny or approve the application upon such terms and conditions it deems advisable, or table or continue the application pending additional information it deems necessary to render a decision.

5.3 Review of Applications Denied by the Department

A. Any person whose application has been denied by the Department pursuant to Section 4.7 may submit a request to the Board of Health to review the Department's denial within 60 days of receipt of the notice of denial.

B. The applicant shall bear the burden of supplying the local Board of Health with sufficient evidence to document that the denied system shall be constructed and used in such a manner that will result in no greater risk than that associated with compliance with the requirements of these Regulations, comply with the declaration and intent of these Regulations, and comply with all applicable state and local regulations and required terms and conditions in any permit. The request shall be made in writing and shall state the facts upon which the applicant bases their request for review, the reasons entitling them to relief, and the specific relief or outcome sought.

C. Following the submission of a written request for review, the Board of Health shall either deny the request or schedule a hearing during the next Board of Health meeting to consider the request.

5.4 Reconsideration of Applications Denied by the Board of Health

A. Any person whose application has been denied by the Board of Health may submit a written request to the Board of Health for reconsideration of the denial within thirty (30) days following the Board of Health's decision.

B. The request for reconsideration shall state the facts upon which the applicant bases their request, the reasons entitling them to relief, and the specific relief or outcome they seek.

C. At the next meeting of the Board of Health following the submission of a request for reconsideration, the Board of Health shall either deny the request or schedule a hearing to reconsider the original denial of the application.

5.5 Appeal of Board Decisions

An applicant need not file a request for reconsideration prior to seeking judicial review of the Board of Health's decision under the provisions of C.R.S. §25-1-513. However, in the event a request for reconsideration is received in a timely manner, the period for seeking judicial review shall terminate 90 days from the Board of Health's final decision on the request for reconsideration.

This Page Intentionally Left Blank.

	ENFORCEMENT	**Section 6**

6.0 System Malfunction

Upon determination by the Department that an Onsite Wastewater Treatment System, or other private wastewater component, is producing a hazardous condition; a **Notice of Violation (NOV)** shall be issued to the owner. The Notice of Violation will include the requirement to eliminate the hazardous condition within a reasonable period of time not to exceed thirty (30) days from the owner's receipt of said violation. Hazardous condition is a malfunction of the OWTS or sewer system connection that is causing a potential hazard to the public or environment. Hazardous condition could include, but is not limited to;

1) Cesspool; or

2) Surfacing effluent; or

3) A leaking tank or wastewater conveyance pipe; or

4) Soil treatment area too close to groundwater table as required in Appendix E; or

5) Unsafe access lids.

6.1 Repair Permits

A. The owner or occupant of a property on which an OWTS is not in compliance shall obtain a repair permit from the Department or approval from sewer district where available. The applicant shall apply for a repair permit (or sewer connection) within two (2) business days after receiving notice from the Department that the system is not functioning in compliance with the OWTS Act or applicable regulations or otherwise constitutes a nuisance or a hazard to public health or water quality.

B. Designs for repairs to OWTS shall comply with all requirements of these Regulations, except that designs that cannot meet the minimum setback requirements in Appendix A may seek a variance from those requirements as set forth in Section 5.

C. The repair permit shall provide for a reasonable period of time within which the owner or occupant shall make repairs. At the end of that period, the Department shall inspect the system to ensure it is functioning properly.

6.2 Emergency Use Permits

A. An emergency use permit authorizing continued use of a failing system may be issued at the discretion of the Department when necessary repairs cannot be completed within the thirty (30) days required in a Notice of Violation. The Department's discretion will be based upon health, safety, welfare and severity of the situation. The permit shall provide for a reasonable period of time within which repairs to the system shall be made.

B. Application for such permit shall be made within two (2) business days of notification by the Department that the system is non-compliant. The emergency use permit shall state the special conditions under which the system must be used (Example: convert a septic tank to a vault to prevent effluent from surfacing in a STA).

C. An emergency use permit may be extended, for good cause shown, in the event repairs may not be completed in the period stated in the repair permit through no fault of the owner or occupant and only if the owner or occupant has demonstrated an effort to make repairs to the system.

6.3 Cease and Desist Orders

A. If the owner does not respond to the actions required in the Notice of Violation and/or conditions of the emergency use permit, the Department may issue an order to cease and desist from the use of any OWTS or sewage treatment works which is found by the Department not to be functioning in compliance with these Regulations or is found to constitute a hazard to public health, or has not otherwise received timely repairs under the provisions of CRS §25-10-106 (1) (j).

B. Such an order may be issued only after a hearing which shall be conducted by the health officer not less than 48 hours after written notice thereof is given to the owner or occupant of the property on which the system is located. The order shall require that the owner or occupant bring the system into compliance or eliminate the health hazard within a reasonable period of time, not to exceed thirty (30) days, or thereafter cease and desist from the use of the system.

C. A cease and desist order issued by the health officer shall be reviewable in the district court for the county wherein the system is located and upon a petition filed not later than ten (10) days after the order is issued.

6.4 Penalties

A. As provided in C.R.S. §25-10-113 (1), any person who commits any of the following acts or violates this article commits a class 1 petty offense and shall be punished as provided in C.R.S. §18-1.3-503,:

1. Constructs, alters, installs, or permits the use of any on-site wastewater treatment system without first applying for and receiving a permit as required in this article;

2. Constructs, alters, installs, or permits the use of any on-site wastewater treatment system in a manner that involves a knowing and material variation from the terms or specifications contained in the application, permit, or variance;

3. Violates the terms of a cease-and-desist order that has become final under C.R.S. § 25-10-106 (1) (k);
4. Conducts a business as a systems contractor without having obtained the license provided for in C.R.S. §25-10-109 (1) in areas in which the local board of health has adopted licensing regulations pursuant to that section;

5. Conducts a business as a systems cleaner without having obtained the license provided for in C.R.S. §25-10-109 (2) in areas in which the local board of health has adopted licensing regulations pursuant to that section;

6. Falsifies or maintains improper record keeping concerning system cleaning activities not performed or performed improperly; or

7. Willfully fails to submit proof of proper maintenance and cleaning of a system as required by rules adopted pursuant to C.R.S. §25-10-106.

B. As provided in C.R.S. §25-10-113 (2), upon a finding by the local board of health that a person is in violation of this article or of rules adopted by and promulgated pursuant to this article, the local board of health may assess a penalty of up to fifty (50) dollars for each day of violation. In determining the amount of the penalty to be assessed, the local board of health shall consider the seriousness of the danger to the health of the public caused by the violation, the duration of the violation, and whether the person has previously been determined to have committed a similar violation.

C. As provided in C.R.S. §25-10-113 (3), a person subject to a penalty assessed pursuant to subsection two (2) of this section may appeal the penalty to the local board of health by requesting a hearing before the appropriate body. The request must be filed within thirty (30) days after the penalty assessment is issued. The local board of health shall conduct a hearing upon the request in accordance with C.R.S. §24-4-105.

D. Use Permits and Operating Permits: If a property owner fails to obtain, and/or renew, a Use Permit or Operating Permit as required in Sections 10 and 11 of these regulations, the department shall issue a Notice of Violation (NOV) to the owner. The NOV shall provide thirty (30) days for the owner to comply with the NOV. If after the thirty (30) days have expired the Use Permit and/or Operating Permit have not been acquired, the owner shall be assessed a penalty of up to fifty dollars ($50)/day of violation. Penalties shall stop being assessed once the owner obtains the Use Permit and/or Operating Permit as required in these regulations.

6.5 Division of Authority to Administer and Enforce

Wherever the term Board of Health, Department or Health Officer is used in this regulation, said terms shall also include the Division under its designated authority for the purposes of administering and enforcing the provisions of this regulation where necessary to protect the public health and environment.

6.6 Primary Enforcement Responsibility

A. The primary responsibility for enforcement of the provisions of the OWTS Act and the regulations adopted under said article shall lie with the Summit County Board of Health and the Summit County Public Health Department.

B. In the event that the Summit County Board of Health fails to administer and enforce the provisions of said section and the regulations adopted under the OWTS Act, the Division

may assume such functions of Summit County Public Health or Summit County Board of Health as may be necessary to protect the public health and environment. C.R.S. §25-10-110.

This Page Intentionally Left Blank.

7.0 General Requirements for Systems Contractors

A. Any person engaged in the business of installing, upgrading, constructing, chemically treating or renovating OWTS shall hold a valid Systems Contractor license issued by the Department. Employees of a licensed Systems Contractor need not be individually licensed.

B. An applicant for a Systems Contractor license shall be required to pass a Department administered test that demonstrates knowledge of these Regulations. A company employing the licensed individual shall only be recognized as licensed as long as the person passing the test remains employed with that company.

C. Systems contractors shall be required to submit all appropriate fees for testing, licensing and renewal of an expiring license.

D. A new license shall be valid through December 31 of the following calendar year and renewals shall coincide with the calendar year thereafter. A license that lapses because of: failure to renew, revocation or suspension shall be subject to the fee established for a new license upon re-application. If the date of re-application is more than six (6) months from the date the license expired, the applicant shall also be required to comply with Section 7.0.B.

E. Systems Contractors shall:

1. Verify that a permit to install an OWTS has been issued prior to commencing excavation and maintain a copy of the permit and the engineering design and specifications at the site of the installation;

2. Verify that there have been no changes in the site conditions under which the permit was issued prior to commencing construction. If any condition on the permit, the supporting engineering or otherwise provided for in these Regulations cannot be met, the Systems Contractor shall notify the Department before proceeding with the installation;

3. Perform all work in compliance with these Regulations and with the conditions specified on the permit and supporting engineering design including, but not limited to, assuring that all required inspections are scheduled with, and performed by the Department;

4. Suspend work and notify the Department should there be any change in site conditions after construction begins that would prevent the installation of the system in accordance with permit conditions or as otherwise provided for in the Regulations. Construction may resume only after authorized by the Department.

5. Be responsible for knowing and implementing regulation changes as they occur. Failure to do so may be grounds for revocation of a Systems Contractor License.

F. The Board of Health may revoke or suspend a Systems Contractor license for failure to comply with these Regulations. Revocation or suspension shall take place only after a hearing before the Board of Health. The license holder shall be given no less than ten (10) days' notice of the hearing and may be represented at the hearing by legal counsel.

G. The Board of Health may lift the suspension or revocation after a hearing at which it is determined that the Systems Contractor has corrected or rectified the conditions that caused the suspension or revocation.

H. Installation of vaulted privies, as allowed in Section 18.7 of these regulations, does not require that the contractor be licensed.

7.1 Requirements for Owner-Installers

When the owner of property desires to install the OWTS on his/her own property, he/she is subject to all requirements of these Regulations, including the requirements of Section 7.0.

This Page Intentionally Left Blank.

8.0 Licensing Requirements for Systems Cleaners

A. Any person engaged in the business of cleaning or pumping of septic tanks, vaults, holding tanks or other components of an OWTS, or transporting sewage to a disposal site shall hold a valid Systems Cleaner license issued by the Department. Employees of a Systems Cleaner need not be individually licensed.

B. An applicant for a Systems Cleaner license shall be required to pass a Department administered test that demonstrates knowledge of these Regulations. A company employing the licensed individual shall only be recognized as licensed as long as the person passing the test remains employed with that company.

C. Systems cleaners shall be required to submit all appropriate fees for testing, licensing and renewal of an expiring license.

D. A new license shall be valid through December 31 of the following calendar year and renewals shall coincide with the calendar year thereafter. A license that lapses because of: failure to renew, revocation or suspension shall be subject to the fee established for a new license upon re-application. If the date of re-application is more than six (6) months from the date the license expired, the applicant shall also be required to comply with Section 8.0.B.

E. The Board of Health may revoke or suspend a Systems Cleaner license for failure to comply with these Regulations. Revocation or suspension shall take place only after a hearing before the Board of Health. The license holder shall be given no less than ten (10) days' notice of the hearing and may be represented at the hearing by legal counsel.

F. The Board of Health may lift the suspension or revocation after a hearing at which it is determined that the Systems Cleaner has corrected or rectified the conditions that caused the suspension or revocation.

8.1 General Requirements for Systems Cleaners

A. Systems Cleaners shall report each OWTS which is cleaned, serviced or inspected to the Department not more than thirty (30) days after such service is performed, on forms provided by the Department. The report shall include the name of the licensee, name of the service person, legal description of the property, property owner, owner's telephone number, property street address, date of service, description of the service performed, volume of sewage pumped, volume of tank, indications of system failure and any other pertinent information.

B. Be responsible for knowing and implementing regulation changes as they occur. Failure to do so may be grounds for revocation of a Systems Cleaners License.

C. Prior to pumping any tank or any other component the Systems Cleaner shall observe the liquid level within the tank.

1. If the liquid level is found to be above the outlet invert, the tank may be pumped but the Systems Cleaner shall note this condition on their inspection report as an indication that the soil treatment area may be saturated.

2. If the liquid level is found to be below the outlet invent of the tank, the Systems Cleaner shall fill the tank to the outlet invert and wait at least forty-eight (48) hours before pumping.

After forty eight (48) hours, if the liquid level has not fallen more than 0.25 inches the tank may be pumped and inspected. If the liquid level has fallen more than 0.25 inches the tank shall be considered to be leaking and must be repaired or reported to the Department as required in Section 8.2.A.10.

8.2 Pumping Requirements

A. Systems Cleaners shall:

1. Obtain any as-built drawings or other records that accurately describe the OWTS they are servicing and have those records available when they are making the service call;

2. Remove the liquid, sludge and scum from all compartments of the tank(s), leaving no more than three (3) inches of sewage sludge in the bottom of the tank;

3. Inspect the tees, baffles, aerator unit, pumps, alarms, filters, siphons and other internal or external components of the tank(s) being pumped and notify the property owner if any of these components are damaged or missing;

4. Inspect and clean any filters or other devices which require routine maintenance and cleaning, if necessary;

5. Test the dosing system, when applicable, to determine that it functions as designed;

6. Provide the property owner with a completed inspection form developed by the Department;

7. Maintain equipment so that no spills will occur during pumping or transportation and that employees are not subjected to health hazards from exposure to the sewage;

8. Dispose of collected sewage only at sites approved by the Department and record the disposal site on the inspection form developed by the Department;

9. Maintain records of the date and address for each septic tank pumped and the date and disposal site for all collected sewage. The Department may require a Systems Cleaner to provide additional documentation regarding their disposal methods and practices; and

10. Report to the Department, within seven (7) days, the location of any leaking septic tank or surfacing wastewater that is found.

This Page Intentionally Left Blank.

9.0 General Requirements

A. Except for designs or types of systems which have been approved by the Division pursuant to CRS §25-10-108 (1), the Board of Health may approve an application for a type of system not otherwise provided for in these Regulations only if the system has been designed by a professional engineer, and the application provides proof of the ability to install a replacement OWTS in compliance with all local requirements in a timely manner in the event of a failure or malfunction of the experimental system.

B. The Board of Health shall not arbitrarily deny any person the right to consideration of an application for such a system and shall apply reasonable performance standards in determining whether to approve such an application per CRS §25-10-108 (2).

This Page Intentionally Left Blank.

10.0 Applicability

A. Prior to a covered transaction or major remodel involving a dwelling or other structure served by an OWTS, the property owner shall obtain a use permit for that system unless exempted or waived as set forth in this section.

B. A use permit shall be required for each system on the property.

C. Owners of limited-occupancy dwellings, not served by a water carriage sewer system, shall obtain a use permit to allow continued limited occupancy of the dwelling.

D. A use permit shall not be required in the following situations:

1. If the OWTS for the property was legally installed less than five (5) years from the date of property closing or application for the building permit. However, if any component of the system is more than five years old, a use permit shall be required for the entire system.

2. Properties with systems that were installed but never connected to a dwelling or structure.

10.1 Application Requirements

A. Applications for the transfer of title and inspection reports must be made on forms furnished or approved by Summit County Public Health. Inspectors shall be certified by National Association of Wastewater Technicians or an equivalent program approved by Summit County Public Health. Inspectors for higher level treatment systems must have training relevant to the specific system or certification by the equipment manufacturer. The applications must include, as appropriate:

1. Owner's name and contact information;

2. Physical address of property;

3. Legal description of property;

4. Name of inspector;

5. Date and time of inspection(s);

6. A septic tank inspection report completed within the previous twelve (12) months, including a septic tank pumping receipt, when applicable, based on the inspection report; and

7. An inspection report completed within the previous twelve (12) months for any mechanical components such as pups, alarms or higher level treatment systems.

8. Appropriate Fees.

B. Unless a use permit is issued, applications shall become void six (6) months from the date of application.

10.2 Minimum Criteria for Approval of a Use Permit

A. The existing OWTS shall meet, at a minimum, the following criteria and conditions:

1. A primary (and secondary, if applicable) treatment unit such as a water-tight, concrete or synthetic septic tank, sealed vault or holding tank, composting or incineration toilet or aeration tank is present and in working order, provided with suitable lids; metal tanks shall not be approved; and

2. All internal devices and appurtenances such as tees, filters and baffles that were originally provided with the tank;

3. Alarms or other mechanical devices necessary for the operation of the system are present and in working order;

4. A soil treatment area, other means of subsurface wastewater treatment, evapotranspiration, or treatment system other than those discharging through a soil treatment area or sand filter is present and in good working order;

5. There is a current operating permit or O&M contract, as applicable, for systems utilizing mechanical components for wastewater treatment;

6. There are no unapproved wastewater discharges from the dwelling or structure such as washing machine drain lines, etc.;

7. The system has not been significantly altered from its original design and configuration as documented in Department records; and

8. Any deficiencies noted in the inspection reports have been corrected with the necessary permits and inspections.

B. For limited occupancy dwellings, the owner shall submit a department approved document limiting occupancy. Document shall set forth the terms of continued occupancy and be signed by the purchaser of the property. The Department shall record this form with the Summit County Clerk and Recorder.

C. OWTS's in Summit County have been required to obtain a construction permit since March 5, 1973. When a Use Permit is performed on an undocumented OWTS the following is required:

1. When the OWTS was installed prior to March 5, 1973, the Use Permit inspector must verify the presence of a STA by locating its area and depth. Where shallow groundwater is suspected due to surface water and/or wetlands being in the vicinity, the Department shall

require that a soil profile test pit excavation be dug and observed to determine compliance with appendix D.

2. When the OWTS was installed after March 5, 1973, a construction permit is required. The owner of the system shall apply for an OWTS permit as required by these regulations and demonstrate design and installation compliance with these regulations, or those that were in existence at the time of installation.

10.3 Issuance of a Use Permit

A. When the conditions in Section 10.2 have been met, the Department shall issue the use permit, setting forth the terms and conditions of approval, including, as appropriate:

1. Determination of size, type and capacity of the system either from the Department records or the inspection reports, and

2. Evidence of past failures or malfunctions within the previous three years from the date of application as shown in Department records, and

3. Circumstances, such as a lack of occupancy, snow coverage, or other factors that may have affected the ability of the inspector to evaluate the system, and

4. Whether the system meets the permitting requirements of the Department; and

5. Any other information the Department deems appropriate.

B. The use permit shall remain valid until the date of the real estate closing, the completion of the remodel, or for a period of six (6) months, whichever comes first. Once the real estate closing or remodel has been completed the use permit need not be renewed until another covered transaction or major remodel occurs.

10.4 Waiver of a Use Permit

A. If it is determined that an OWTS does not meet any of the requirements in Section 10.2, the requirement for a use permit may be waived, provided that the purchaser:

1. Has executed a written agreement with the Department agreeing to upgrade, repair or replace those non-compliant components within ninety (90) days of occupying the dwelling or structure, or

2. Has obtained a tap to allow connection to a sanitation district sewer line and agrees to complete the connection and abandon the non-compliant OWTS within ninety (90) days of occupying the structure.

If conditions, such as snow cover, frozen ground or lack of access limit the ability of the purchaser to complete all necessary repairs within ninety (90) days, the Department may authorize an extension considering any potential public health and environmental impacts.

B. If conditions, such as snow cover, prevent access to the property for performing an inspection, a waiver may be issued allowing the transfer or remodel to occur with receipt of the following:

1. Use Permit inspector provides documentation that property is inaccessible and that the inspection/pumping to be performed when conditions allow, has been paid up front.

2. Buyer signs an agreement to have the inspection completed when conditions allow and to make any necessary repairs as required.

10.5 Renewal of a Use Permit

Provided it has not expired, a use permit may be renewed one time for a period of six (6) months upon completion of the appropriate form and payment of the required fee.

10.6 Revocation of a Use Permit

The Department must revoke a use permit based upon a determination that the OWTS is no longer functioning in accordance with these Regulations or that false or misleading material statements were made on the application or inspection reports.

This Page Intentionally Left Blank.

11.0 Applicability

A. Effective January 01, 2015, an operating permit shall be required for any system, new or existing, that includes a higher level treatment unit as defined by these Regulations. Systems that incorporate only pumps or lift stations, such as Intermittent Sand Filters covered in Section 17.2.B, are exempt from the requirements of this section.

B. An owner of such a system shall be required to obtain an operating permit:

1. At the time of system installation, repair, alteration, or upgrade,

2. At the time of the expiration of the operation and maintenance service contract,

3. When a transfer of the property occurs, and

4. Within three (3) years of the effective date of these Regulations for existing higher level treatment systems.

C. An operating permit must be maintained and renewed until the system is either abandoned or the Department authorizes the decommissioning or removal of the high level treatment unit.

1. The Department shall not authorize the removal of higher level treatment components unless:

a. The OWTS would conform to the requirements for TL1 systems, including minimum distance setbacks required in Appendix A, and vertical separation setbacks required in Table 16-3, and

b. Removal would be appropriate for the type of STA used (ex. Some drip systems require TL2 higher level treatment).

D. The Board of Health shall adopt fees and policies for the administration of operating permits.

11.1 Minimum Application Requirements

A. Application for an operating permit shall include:

1. Owner name and contact information;

2. Property address and legal description;

3. Type of onsite wastewater treatment system (new applications only);

4. Level of treatment being provided (new applications only);

5. Name of service provider;

6. Copy of operation and maintenance service contract; and

7. Fees as determined by the Board of Health.

11.2 Operating Permit Requirements

A. An operating permit shall specify the following:

1. Owner name;

2. Property address and legal description;

3. Type, make and model of the component(s) requiring maintenance;

4. Name of the service provider;

5. Term of permit;

6. Required service intervals;

7. Reporting requirements, if applicable; and

8. Sampling requirements, if applicable.

B. The Department shall maintain accessible records for the system that includes the following:

1. Items noted in 11.2.A above, and

2. As-built drawing indicating various components of the OWTS including location of septic tank, higher level treatment system, soil treatment area and other components, and

3. Inspection and maintenance performed:

a. Dates system was inspected and/or maintained,

b. Name and contact information of inspector and/or maintenance provider,

c. Condition of system at inspection, and

d. Maintenance tasks performed.

4. Condition of system at completion of any maintenance activity.

11.3 Inspection and Maintenance Requirements

A. For proprietary systems, inspection and maintenance of the system shall be performed in accordance with the manufacturer's recommendations. For older proprietary systems that may

not have current manufacturer recommendations, inspection and maintenance shall be performed in accordance with 11.3.C.

B. For public domain systems, inspection and maintenance shall be as determined by the design engineer or the following requirements, whichever is more stringent.

1. All tanks shall be inspected to assure that they are structurally sound and that all components such as lids, baffles, tees, vents, effluent screens, etc. are present and in good condition. The scum and sludge level in the tanks shall be measured and tanks shall be pumped if the scum and sludge depth exceeds eighteen (18) inches.

2. Effluent filters shall be inspected and cleaned at an appropriate interval to assure proper function.

3. Each motor and pump shall be inspected to assure that it is operating properly.

4. Internal electrical connections shall be inspected to assure that they are not damaged or otherwise subject to corrosion or damage that could cause a failure or electrical short circuit.

5. The control panel and its appurtenances shall be inspected to assure that all components such as timers, event recorders or counters, audible and visual alarms, auto-dialers, etc. are functioning properly.

6. Components intended to agitate or introduce air into the wastewater such as impellers, air jets, bubblers, air diffusers, aspirators, paddles, etc. shall be inspected to assure that they are functioning properly and are free from lint, hair and other debris. Blowers or compressors shall be inspected to assure they are operating properly and that air filters are cleaned or replaced. If so equipped, the ammeter or voltage regulator shall be checked to verify that the motor is not drawing excess current.

7. All components such as media filters, sand filters, suspended growth media, etc. shall be inspected to verify that there is no damage, excess sludge buildup, clogging, filter bridging, etc. and that spray or dispersal nozzles are free from debris and functioning properly.

8. The STA shall be inspected to verify that no wastewater is being discharged onto the surface of the ground and that it is not being impacted by erosion, excess vegetation, or compaction.

9. The service provider shall also note any unusual or abnormal conditions such as excessive or strong odors, noise, wastewater color, etc. that may indicate an operational problem with the system.

C. At a minimum, maintenance shall take place every six (6) months for higher level treatment systems with mechanical parts, every twelve (12) months for higher level treatment systems with no mechanical parts, or when holding tanks of vaults reach eighty (80) percent of capacity. The Department may amend the operating permit to reduce or increase the maintenance frequency based on information contained in the required inspection reports.

11.4 Renewal of an Operating Permit

Prior to the expiration of an operating permit, the owner shall submit an application to renew the permit.

11.5 Revocation of an Operating Permit

A Department may revoke an operating permit for non-compliance with the permit conditions or the requirements of these Regulations.

11.6 Service Provider Requirements

A. A service provider shall, at a minimum:

1. Be NAWT O&M 2 certified, or equal, to perform OWTS maintenance for that type of system. In addition to the NAWT certification, the provider shall be certified by the product manufacturer to perform maintenance on that unit when available;

2. Perform inspection, maintenance and sampling as set forth in the operating permit;

3. Provide a copy of their inspection report and sampling results to the owner;

4. Report the findings of their inspection and sample test results, if required, in a manner acceptable to the Department;

5. Notify the Department within seven (7) days of any hazardous conditions observed, as defined in section 6.0 of these regulations;

6. Notify the Department within seven (7) days if an operation and maintenance contract is terminated prior to the original termination date as set forth on the operating permit.

This Page Intentionally Left Blank.

12.0 Site and Soil Evaluation

A. A site and soil evaluation shall be conducted for OWTS proposed, to determine the suitability of a location to support an OWTS and to provide the designer a sound basis to select the most appropriate OWTS design for the location and application.

B. Each site evaluation shall consist of:

1. Preliminary investigation;

2. Reconnaissance;

3. Detailed soil investigation; and

4. Report and site plan.

12.1 Preliminary Investigation

A. A preliminary investigation shall review documented information relative to the site and anticipated conditions. Information gathered as part of the preliminary investigation shall include, but is not limited to:

1. Property Information, including:

   a. Address

   b. Legal description

   c. Existing structures

   d. Location of existing or proposed wells on the property

2. Department records of any previous system installation or repair.

3. Published site information, including topography and soil data.

4. Location of physical features, on and off the property that will require setbacks as identified in Appendix A, Table A-1.

5. Preliminary soil treatment area size estimate based on information on existing or planned facility and local regulations.

6. Additional information that may be useful to the specific evaluation:
   a. Surveys;

b. Easements;

c. Floodplain maps;

d. Disturbance envelopes;

e. Geology and basin maps and descriptions;

f. Aerial photographs;

g. Climate information; and

h. Delineated wetlands maps.

7. Other information required by Department.

12.2 Reconnaissance Visit

A. A reconnaissance visit to the property shall evaluate the topography and other surface conditions that will impact the selection, location and design of the OWTS, including:

1. Location of physical features, on and off the property that will require setbacks as identified in Appendix A, Table A-1;

2. Landscape position;

3. Topography;

4. Vegetation;

5. Natural and cultural features; and

6. Current and historic land use.

12.3 Detailed Soil Investigation

A. Soil investigations to determine the long-term acceptance rate of a soil treatment area shall be either:

1. Visual and tactile evaluation of two or more soil profile test pit excavations; or

2. Percolation tests plus visual and tactile evaluation of one or more soil profile test pit excavations.

B. If visual and tactile evaluations of soil are performed without percolation tests to determine a long-term acceptance rate:

1. Evaluation of two or more soil profile test pit excavations shall be performed to determine soil types and structure, restrictive layers, evidence of seasonal high ground water, and best depth for the infiltrative surface.

2. At least one of the soil profile test pit excavations shall be performed adjacent the portion of the soil treatment area anticipated to have the most limiting conditions.

3. The total number of soil profile test pit excavations required is based on the judgment of the competent technician.

C. Soil profile test pit excavation(s) shall be evaluated to determine whether current ground water levels and/or bedrock is encountered within eight (8) feet of the ground surface.

12.4 Percolation Tests

A. The percolation testing shall be performed by a trained person under the supervision of a professional engineer or by a competent technician as provided for in Section 12.11.

B. Percolation testing shall be performed at the depth of the proposed infiltrative surface of the soil treatment area, or a more restrictive soil type within the treatment depth. The treatment depth is two to four feet depending on the required thickness for the treatment level below the infiltrative surface from Appendix C.

C. Soil percolation tests shall be performed in at least three test holes in the area in which the soil treatment area is to be located, spaced reasonably even over the proposed area. There shall be no less than one test hole provided in every 1,200 square foot area of soil treatment area.

D. If the likely depth of a proposed infiltrative surface is uncertain, percolation tests shall be performed at more than one depth to determine the depth of the infiltrative surface.

E. The percolation test hole shall have a diameter of eight to twelve (12) inches and be terminated a minimum of six (6) inches and a maximum of 18 inches below the proposed infiltrative surface.

F. If a change of soil type, color or structure is present within those soils comprising the depth of soil below the infiltrative surface as required in Table 16-3 for vertical separation, a minimum of two soil percolation holes shall be terminated in the changed soil, and percolation tests shall be conducted in both holes.

G. The percolation tests shall be conducted using the hole preparation, soil saturation and rate measurement procedures described below.

1. Preparation of Percolation Test Holes

a. Excavate the hole to the depth and diameter required.

b. Carefully scrape the bottom and sides of the hole with a knife blade or sharp instrument to remove any smeared soil surfaces and provide a natural soil interface into which water may percolate.

c. Remove all loose soil from the hole.

d. Add two inches of very coarse sand or fine gravel to protect the bottom of the hole from scouring and sediment.

2. Presoak

a. The hole shall be presoaked adequately to accomplish both saturation, which is filling the void spaces between the soil particles, and swelling, which is the intrusion of water into the individual soil particles.

b. To presoak the hole, carefully fill the hole with clean water to a minimum depth of twelve (12) inches over the gravel placed in the bottom of the hole. In most soils, it is necessary to refill the hole by supplying a surplus reservoir of clean water, possibly by means of an automatic siphon, to maintain water in the hole for at least four (4) hours and preferably overnight. Determine the percolation rate twenty-four (24) hours after water is first added to the hole. This procedure is to ensure that the soil is given ample time to swell and to approach the condition it will be in during the wettest season of the year. In sandy soils containing five (5) percent or less particles passing the #200 sieve, by weight, the swelling procedure is not essential and the test may be conducted after the water from one filling of the hole has completely seeped out of the hole.

3. Percolation Rate Measurement

a. With the exception of sandy soils containing five (5) percent or less particles passing the #200 sieve, by weight, percolation rate measurements shall be made on the day following the presoak procedure.

b. If water remains in the percolation test hole after the swelling period, adjust the depth to approximately six inches above the gravel in the bottom of the hole. From a fixed reference point, measure the drop in water level over a series of thirty (30) minute intervals. The drops are used to calculate the percolation rate.

c. If no water remains in the hole after the swelling period, carefully add clean water to bring the depth of water in the hole to approximately six (6) inches above the top of the gravel in the bottom of the hole. From a fixed reference point, measure the drop in water level at 30 minute intervals for four (4) hours, refilling to six (6) inches over the top of the gravel as necessary. The drop in water level that occurs during the final 30-minute period is used to calculate the percolation rate. If the water level drops during prior periods provide sufficient information, the procedure may be modified to suit local circumstances. The requirement to conduct a four (4) hour test under this section is waived if three successive water-level drops do not vary by more than 0.0625 inch; however, in no case shall a test under this section be less than two (2) hours in duration.

4. Sandy Soils

    a. In sandy soils or other soils in which the first six (6) inches of water seeps out of the hole in less than 30 minutes, after the twenty-four (24) hours swelling period, the time interval between measurements shall be taken as ten (10) minutes and the test conducted for one (1) hour. The drop that occurs during the final ten (10) minutes shall be used to calculate the percolation rate.

    b. If the soil is so sandy or coarse-textured that it will not retain any water, then the infiltration rate shall be recorded as less than one (1) minute per inch.

    c. The Department may identify soil types in its area, for which it shall require different procedures such as extra presoaking to obtain a valid percolation rate.

5. Special Soil Types

    a. The Department may identify soil types in its area, for which it shall require different procedures such as extra presoaking to obtain a valid percolation rate.

6. Percolation Rate Determination and Reporting

    a. The field percolation rate shall be the average rate of the percolation rates determined for all percolation test holes observed in the proposed soil treatment area in minutes per inch. The average percolation rate determined by the tests shall be used in determining the long-term acceptance rate for the proposed system from Table 16-1.

    b. When the percolation rates for the fastest and slowest test holes on a site vary by more than fifty (50) percent, the fastest percolation test hole data shall not be used in calculating the percolation rate. If all test holes vary from each other by more than fifty (50) percent, the slowest of the results shall be used for design purposes. If the designer wants to use the faster data, a minimum of three (3) additional percolation tests may be conducted to establish a more accurate percolation rate. When conducting additional tests, all percolation tests shall be used in calculating the final percolation rate.

    c. The technician performing the percolation tests shall furnish an accurate scale drawing, showing the location of the soil profile test pit excavations and percolation holes tied to lot corners or other permanent objects. The drawing shall meet the criteria in Section 12.9. The information the Section 12.9.C.6 through 12.9.C.10 may be included but is not required for this drawing. All holes shall be clearly labeled to relate to the information provided for the profile test pits and percolation tests.

7. Percolation Test Waiver

    a. If the applicant demonstrates to the satisfaction of the Department that the system is not dependent upon soil absorption, the requirement of percolation tests may be waived.

8. Alternate Percolation Testing

    a. Alternate percolation test procedures may be approved, provided the test results of alternate procedures are substantially equivalent to those determined using the test procedures described in this section.

    b. Prior approval from the Department of alternate percolation test procedures is required.

12.5 Visual and Tactile Evaluation of Soil Requirements

A. Each soil profile test pit excavation observed at the proposed soil treatment area shall be evaluated under adequate light conditions with the soil in an unfrozen state.

B. The soil observations shall be conducted immediately adjacent to, or down gradient from, the location of the proposed soil treatment area, but if possible, not under the final location of a trench or bed.

C. The soil observation method shall allow observation of the different soil horizons that constitute the soil profile.

D. Soil profile test pit observations shall be conducted prior to percolation tests to determine whether the soils are suitable to warrant percolation tests and, if suitable, at what depth percolation tests shall be conducted.

E. The minimum depth of the soil profile test pit excavation shall be to the periodically saturated layer, to the bedrock, or four (4) feet below the proposed depth of the infiltrative surface, whichever is encountered first.

F. The soil type at the proposed infiltrative surface of the soil treatment area, or a more restrictive soil type within the treatment depth, shall be used to determine the long-term acceptance rate from Table 16-1. The treatment depth is two (2) to four (4) feet depending on the required thickness for the treatment level below the infiltrative surface from Appendix C.

G. Soils data, previously collected by others at the site may be used for the purposes of an OWTS design at the discretion of the Department. Previous soils data shall be verified by performing, at a minimum, an evaluation of a soil profile test pit excavation.

12.6 Determination of a Limiting Layer

A. Soil descriptions for determination of a limiting layer shall include:

    1. The depth of each soil horizon measured from the ground surface and a description of the soil texture, structure, and consistency of each soil horizon;

    2. Depth to the bedrock;

    3. Depth to the periodically saturated soil as determined by:

a. Redoximorphic features and other indicators of water levels, or

b. Depth of standing water in the soil observation excavation, measured during maximum seasonal groundwater periods, unless redoximorphic features indicate a higher level; and

4. Any other soil characteristic that needs to be described to design a system, such as layers that will restrict permeability.

12.7 Percolation Hole and Profile Test Pit Marking

The engineer or technician conducting the percolation tests shall, upon completion of the tests, flag or otherwise mark each hole to allow easy location by others. Percolation holes and profile test pits shall remain open until after evaluation by the Department unless otherwise approved. Excavations shall be barricaded to prevent access by unauthorized persons or animals.

12.8 Report and Site Plan

A. A written report shall describe the results of the preliminary investigation, reconnaissance, and detailed soil evaluations. The report may be in text and/or tabular form and shall include a site drawing that identifies features relative to the proposed OWTS location and test locations. The report may be included as part of the OWTS design document. The report shall include, but is not limited to:

1. The name, address, telephone number, e-mail address, and credentials and qualifications of the individual conducting the site evaluation;

2. Preliminary and detailed evaluations, providing information from the surface site characteristics assessment and soils investigation;

3. Dates of preliminary and detailed evaluations;

4. A graphic soil log, to scale, indicating depth of drill hole or excavation, soil description and classification, depth to ground water encountered during drilling or excavation, type of equipment used to drill the profile hole or excavate the soil profile test pit, date of soils investigation, name of investigator and company name.

5. Setback distances to features listed in Appendix A, Table A-1, existing on the site or in close proximity to applicable setback limits, whichever is greater;

6. A drawing created to a scale that provides the complete property boundary lines with a minimum drawing size of 8.5-inches by 11-inches and a maximum of 11 by 17 inches. If the property is too large to adequately indicate and label the profile test pits and percolation test holes, a detail of the portion of the site containing the soil profile test pits and percolation test holes shall be submitted. If the property is too large to adequately show site evaluation information, a detail drawing that includes the information required from the site and soil evaluation that will impact the location of the OWTS shall be submitted. Drawings shall indicate dimensions, have a north arrow and graphic scale and include:

a. Horizontal and vertical reference points of the proposed soil treatment area; soil observations; percolation testing results and pertinent distances from the proposed OWTS to all required setbacks, lot improvements, easements; ordinary high water mark of a pond, creek, stream, lake, wetland or other surface waters, and detention or retention ponds; and property lines;

b. Contours or slope direction and percent slope;

c. The location of any visible or known unsuitable, disturbed or compacted soils;

d. The estimated depth of periodically saturated soils and bedrock, or flood elevation, if applicable; and

e. The proposed elevation of the infiltrative surface of the soil treatment area, from an established datum (either ground surface or a benchmark).

B. Anticipated construction-related issues;

C. An assessment of how known or reasonably foreseeable land use changes are expected to affect the system performance, including, but not limited to, changes in drainage patterns, increased impervious surfaces and proximity of new water supply wells; and

D. A narrative explaining difficulties encountered during the site evaluation, including but not limited to identifying and interpreting soil and landform features and how the difficulties were resolved.

12.9 Design Document

A. The report and site plan may be attached to the design document or the report and site plan may be combined with the design information as a single document.

B. The design document shall include a brief description of the facility and its proposed use, basis and calculations of design flow, and influent strength.

C. The design document shall contain all plan detail necessary for permitting, installation and maintenance, including:

1. A statement by the designer that the design is per the requirements of these Regulations;

2. Assumptions and calculations for each component;

3. A scale drawing showing location of each OWTS component and distances to water, physical and health impact features requiring setbacks as set forth in Appendix A, Table A-1, including all wells less than 200 feet from the proposed STA;

4. Layout of soil treatment area, dimensions of trenches or beds, distribution method and equipment, distribution boxes, drop boxes, valves, or other components used;

5. Depth of infiltrative surface of soil treatment area, depth of the septic tank, depth of other components;

6. Specifications of each component;

7. Specifications for septic tanks or other buried components shall include loads due to burial depth, additional weight or pressure loads, and highest elevation of ground water. Resistance to local water composition such as high sulfates shall be included in the specification if such conditions exist at the site;

8. References to design manuals or other technical materials used;

9. Installation procedures;

10. Operation and maintenance manuals or instructions; and

11. Other information that may be useful such as photos and cross-section drawings.

12.10 Site Protection

During construction, the proposed soil treatment area and replacement area, if any, shall be protected from disturbance, compaction, or other damage by staking, fencing, posting, or other effective method.

12.11 Qualifications for a Competent Technician

A. Technicians performing percolation tests shall have the following competencies:

   1. Set up equipment;

   2. Perform and run percolation tests according to the procedure in these Regulations; and

   3. Record results and calculate percolation rates.

B. The Department may approve training for percolation testing.

C. Technicians performing visual and tactile evaluation of soil shall have the following competencies:

   1. Identify soil types by hand texturing and observation;

   2. Identify presence or absence of soil structure;

   3. Identify grade of soil structure;

   4. Recognize evidence of highest seasonal water surface;

   5. Identify layers and interfaces that will interfere with effluent movement;

6. Determine the most promising depth for infiltrative surface of OWTS and for percolation tests, if used; and

7. Understand basic principles of OWTS siting and design. Possible demonstrations of competence in visual and tactile evaluation of soil:

    a. Degree in soil science, agronomy, geology, other majors if a course(s) in soil morphology was included; or

    b. Attendance at training or workshop for soil evaluation for OWTS including both class and field work.

12.12 Qualifications for a Designer

A. An Onsite Wastewater Treatment System must be designed by a licensed professional engineer in the following situations:

1. As required in Appendix C,

2. Where the ground slope is in excess of thirty percent (30%) in the area of the proposed STA,

3. The maximum seasonal level of the ground water surface is less than four (4) feet below the bottom of the proposed absorption system,

4. A restrictive layer exists less than four (4) feet below the bottom of the proposed absorption system,

5. Pressure distribution is used,

6. For Multi-Family and Commercial systems (Section 13.3.B),

7. Sand Filters (Section 17.2),

8. Rock Plant Filters (Section 18.5),

9. Soil Replacement Systems (Section 16.3.H),

10. New Seepage Pits (Section 16.18.D),

11. OWTS's utilizing a Subsurface Drain to divert shallow groundwater (Section 16.16)),

12. Wastewater Ponds (Section 18.8), or

13. Systems discharging to anything other than a soil treatment area (Section 18.9).

This Page Intentionally Left Blank.

13.0 Wastewater Flows

A. The Department may require the installation of a meter to measure flow into the facility or the OWTS.

B. Reductions in flow rates shall not be permitted for the installation of water-saving plumbing fixtures.

C. An OWTS treating the wastewater remaining after the separation of the toilet wastes must meet all minimum design and construction standards for a TL1 OWTS based on the volume and character of wastes for the fixtures and the number of persons to be served.

13.1 Single-Family Residential Homes

A. Table 13-1 provides the design flows for single-family residential dwellings.

Table 13-1 MINIMUM SINGLE-FAMILY RESIDENTIAL DESIGN FLOWS*

# of Bedrooms	Occupancy (# of Persons)	Design Flow (75 gallons / person / day)
2 (minimum)	4	300
3	6	450
Each additional	add 2	Add 150

*See also Appendix B

B. The minimum design flow for the repair or replacement of an OWTS of an existing one (1) bedroom dwelling or a dwelling where separate bedrooms are not provided shall be one (1) bedroom unless bedrooms are to be added to the dwelling.

13.2 Non-Residential Auxiliary Buildings

A. If a single-family home has a non-residential auxiliary building, such as a non-commercial shop with plumbing fixtures, home office, etc., the flow may be conveyed to the OWTS of the home, or to a separate OWTS constructed to handle the flow from the auxiliary facility.

B. If the flow from the auxiliary building is only generated by residents of the home, it shall be assumed that the existing OWTS for the home will be adequately sized to include the auxiliary building if the flows are combined.

C. The flow from the auxiliary building must be conveyed into the existing OWTS such that it passes through all of the treatment and disposal components.

D. If the auxiliary building will have users in addition to residents and the flow from the auxiliary building will flow to the OWTS of the home, the design flow of the home shall include the increased use.

E. If the auxiliary building has a separate OWTS, the facility shall be sized on the basis of Appendix B and a septic tank detention time of no less than 48 hours.

13.3 Multi-Family and Commercial On-site Wastewater Treatment Systems

A. Design flow values and strengths for multi-family and commercial systems shall be determined from Appendix B; or

B. An analysis of flows and strengths from at least three (3) comparable facilities or from the facility, if it is an existing facility, shall be submitted to the Department for approval. The analysis shall include:

   1. Metered water flows for inside use only for at least a year, or if use is seasonal, for a full season. If metered flows are less than full capacity, they shall be paired with actual use in units of persons present or meals served or other units as appropriate so that an actual daily rate per unit can be determined. The daily rate per unit times the number of units at full occupancy shall be the design flow.

   2. Total Suspended Solids and BOD_5 or $CBOD_5$ tests at times of full use. At least three (3) samples taken at least one (1) week apart are required.

   3. Explanation and justification for the comparability of the tested facilities with the proposed facility.

C. Systems serving commercial, industrial, institutional or multi-family structures shall:

   1. Receive only such biodegradable wastes for treatment and distribution as are compatible with those biological treatment processes as occur within the septic tank, any additional treatment unit and the soil treatment area; and

   2. Receive authorization by rule or a Class V underground injection permit from the EPA before an application for an OWTS permit is approved if the system may receive non-residential wastewater or is otherwise covered by the EPA underground injection control program.

13.4 Flow Equalization

A. Flow equalization may be used if a facility has flows that vary from day to day by more than four (4) times the average flow.

B. The highest peak assumed shall be at least equal to the full capacity of the facility. If that peak exceeds 2,000 gallons per day, the design must also comply with the provisions of Section 3.1.B.

C. The stored flow shall be distributed to the soil treatment area before the next greater-than-average peak.

D. Flow equalization may be used only if:

   1. The facility is non-residential;

2. The facility is only used for one purpose;

3. Flows will follow a predictable pattern; and

4. There is a long-term expectation that size and pattern of the flows will remain the same.

E. Timed pressure distribution shall be used. The soil treatment area reduction for timed pressure distribution shall not be used in addition to the flow equalization reduction.

F. Contingency plans shall be made for expanding the capacity of the OWTS in the event of changed use at the facility.

13.5 Wastewater Strength

A. Table 13-2 includes levels of treatment that can be achieved by various OWTS components, excluding the soil treatment area. Systems qualifying for these treatment levels, except TL1 produced by a septic tank alone, shall be approved under Section 17 of these Regulations.

B. $CBOD_5$ strength shall be reduced to Treatment Level TL1 or lower before applying to a soil treatment area.

Table 13-2 TREATMENT LEVELS AND WASTEWATER STRENGTH

Treatment Level	$CBOD_5$* (mg/L)	TSS (mg/L)	Total Nitrogen (mg/L)
TL1**	145	80	60-80
TL2* **	**25**	**30**	**60-80**
TL2N** **	**25**	**30**	**>50 percent reduction***** **
TL3	**10**	**10**	**40-60**
TL3N	**10**	**10**	**20 mg/L**

TABLE NOTES

BOLD indicates higher treatment levels

**If concentrations of organic material are submitted in BOD_5 without data in $CBOD_5$, the data in BOD_5 shall be multiplied by 0.85 to estimate $CBOD_5$ levels.*

***Domestic septic tank effluent prior to soil treatment or higher level treatment has a wide range of concentrations. These values are typical, but values used for design shall account for site-specific information.*

****NSF/ANSI Standard 40 or equal third party certification*

*****NSF/ANSI Standard 245 or equal third party certification*

******NSF/ANSI Standard 245 – Wastewater Treatment Systems – Nitrogen Reduction requires reduction of 50 percent rather than an absolute value.*

This Page Intentionally Left Blank.

Note: This section covers components not covered in Sections 15 – 18.

14.0 General Standards

A. An OWTS shall be designed and constructed to achieve the treatment level specified by the design.

B. An OWTS shall be designed and constructed such that each component shall function, when installed and operated, in a manner not adversely affected by normal operating conditions including earth and hydrostatic pressure, erosion, corrosion, vibration, shock, climatic conditions, and usual household chemicals.

C. Each OWTS component shall be free of non-functional protrusions or sharp edges, or other hazards, which could cause injury to persons, animals, or properties.

D. The OWTS design shall be such as to exclude flies and rodents and other vectors and to prevent the creation of nuisances and public health hazards and shall provide for efficient operation and maintenance.

E. All components shall be installed and used in accordance with the recommendation of the manufacturer or the requirements of these Regulations, whichever is more stringent.

14.1 Plumbing Codes

Plumbing fixtures, building sewers, vents, sewer lines and other appurtenances shall be designed, operated and maintained so as to comply with the minimum requirements of the most recently adopted local plumbing code. In absence of a local plumbing code, designs shall adhere to the Colorado Plumbing Code (3 CCR 720-1). A local plumbing permit may be required.

14.2 Component Operating Instructions

A. The manufacturer of proprietary treatment units utilizing mechanical components shall provide clear, concise written instructions covering the components which, when followed, shall assure proper installation and safe and satisfactory operation and maintenance.

B. If the OWTS uses public domain technology, the design engineer shall provide clear, concise written instructions covering the components which, when followed, shall assure proper installation and safe and satisfactory operation and maintenance.

14.3 Water Meters

Water meters, if required, shall be equipped with a remote counter or read-out such that they can be read from a readily accessible location outside the dwelling or structure served by the system.

14.4 Floor Drains

Floor drains from any facility or area where maintenance work is performed on internal combustion engines shall not be connected to any OWTS unless that system consists solely of a sealed vault or holding tank.

14.5 Raw Wastewater Pumping Systems

A. A design for the wastewater pumping system shall accompany the permit application. The design shall include a drawing and specifications sheet which has been approved by the design engineer.

B. Pumps shall be certified to the applicable UL or CSA electrical safety standard, bear the seal of approval of CSA, UL or an equivalent testing program and be constructed of corrosion resistant materials.

C. Non-clog pump opening shall have at least two (2) inch diameter solids handling capacity where raw wastewater is pumped. A pump opening shall not have more than 0.75 inch diameter solids handling capacity if previously settled effluent is pumped.

D. Grinder pumps shall also be certified to NSF/ANSI Standard 46 and bear the seal of approval of the NSF or equivalent testing and certification program.

E. In-vault pumps shall be provided with quick-disconnect joints to allow for routine removal for maintenance and replacement as well as a surrounding screen or filter for pumps placed in the second compartment of septic tanks. Quick-disconnect joint shall be located within twenty-four (24) inches of the access lid.

F. Where practical, wastewater pumping systems shall be restricted to levels of the building that are unable to provide gravity drainage to the septic tank. In these cases, upper level plumbing systems shall be separated from lower level plumbing to minimize the amount of wastewater being pumped.

14.6 Grease Interceptor Tanks / Traps

A. All commercial food service facilities and other facilities generating fats, oils and greases in their waste shall install a grease interceptor tank or grease trap.

B. Grease interceptor tank or trap shall be properly maintained and shall treat only those portions of the total wastewater flow in which grease and oils are generated.

14.7 Oil / Water Separators

Unless the system consists of a vault, discharges from oil / water separators shall not be conveyed to the Onsite Wastewater Treatment System.

14.8 Pipe Standards and Bedding Requirements

A. All wastewater lines used in an OWTS shall be constructed of compatible pipe, primer, bonding agent, and fittings.

B. Where unperforated plastic pipe and fittings are used for gravity flow, the minimum wall thickness of the pipe shall conform to ASTM Standard D 3034 or equivalent or greater strength. Schedule 40 pipe is preferred.

C. Perforated distribution pipe surrounded by rock within a soil treatment area shall have a minimum wall thickness and perforations conforming to ASTM Standard D 3034 or equivalent or greater strength. Corrugated polyethylene pipe with smooth interior that meets ASTM F405 or AASHTO M252 specifications or equivalent may be used.

D. Schedule 40 or pipe of equivalent or greater strength shall be used for the placement of piping under driveways or roadways and in instances where sewer line setback distances are granted a variance for any reason.

E. Tile pipe, open-joint pipe, and cast iron pipe must not be used in an OWTS.

F. Pressure pipe must be rated for the intended use to accommodate pump discharge pressure.

G. All system piping, except for distribution laterals within the soil treatment area, shall be bedded with select material before final inspection by the Department. Select bedding material shall consist of loose, granular material, free from stones, clods, frozen soil, or other deleterious material. Material shall not be sharp or larger than 2 ½ inches. Select material may consist of on-site job-excavated or imported material. Bedding material must be mechanically compacted to support piping.

14.9 Building Sewer

A. The grade of the building sewer shall be at least two (2) percent except for the five (5) feet preceding the septic tank where the grade shall not exceed four (4) percent. Lesser slopes may be allowed at the discretion of the Department with verification by a professional engineer that gravity flow, and sufficient flushing flows, will be maintained throughout the length of the line. If the tank consists of a sealed vault, the sewer line may exceed four (4) percent the entire length.

B. Bends in the building sewer between the structure and the first treatment component shall be limited to 45 degrees or long sweep 90 degree bends.

C. Clean-out piping shall be provided within five (5) feet of the house and at least every one hundred (100) feet or fraction thereof. The clean-out shall be of the same material as the pipe and be fitted with a removable cap. The top of the clean-out may be below the final grade of the surface if it has a cover at the surface such as a valve box for a lawn irrigation system.

D. Building sewer shall have a minimum diameter of four (4) inches.

E. The inlet and outlet pipes of the septic tank shall be sealed with watertight materials.

14.10 Effluent Piping

A. The discharge line from the pumping or siphon chamber or tank shall be buried and protected from freezing by sloping the pipe at least two (2)%, or other means acceptable to the department. Drainage shall be provided through the bottom of the pump or through a weep hole located in the discharge line prior to exiting the tank.

B. The pump discharge piping shall have a quick disconnect that is accessible within twenty-four (24) inches of the riser lid to allow for easy pump access and removal.

C. The pipe shall be sized to maintain a velocity of two (2) or more feet per second.

D. Automatic air/vacuum release valves shall be installed at high points in the pressure line where necessary to prevent air or vacuum locking and allow self-draining of the lines.

E. When using a dosing siphon or for gravity systems where a tank is replaced, at least one (1) clean-out shall be placed on the effluent line near the dosing tank and fitted with a removable cap. The top of the clean-out may be below the final grade of the surface if it has a cover at the surface such as a valve box for a lawn irrigation system. Effluent line clean-outs are not required on systems utilizing a pump.

14.11 Accessibility for Inspection, Maintenance, and Servicing

A. Each treatment component of an OWTS other than the soil treatment area shall be equipped with access manholes with risers that extend to or above final grade, located to permit periodic physical inspection, collection and testing of samples and maintenance of all components and compartments. Components include, but are not limited to; septic tank compartments, dosing compartments and distribution boxes.

B. Each riser lid brought to the surface shall have a secure closing mechanism, such as a lock, special headed bolts or screws, or sufficient weight to prevent unauthorized access.

C. Components that require access for maintenance shall include but not be limited to submerged bearings, moving parts, pumps, siphons, valves, tubes, intakes, slots, distribution boxes, drop boxes, cleanouts, effluent screens, filters, inlet and outlet baffles, aerators, treatment equipment and other devices.

D. Components shall be designed and constructed so that, when installed, they shall be easily maintained, sampled, and serviced according to the manufacturer's recommendations. Easy physical access to treatment components by maintenance personnel and equipment shall be provided.

E. See also Sections 15.5, 15.8 and 18.6.

14.12 Electrical Equipment

A. All electrical work, equipment, and material shall comply with the requirements of the currently applicable National Electrical Code as designated by the State Electrical Board Rules and Regulations (3 CCR 710-1). A local electrical permit may be required.

B. Electrical components shall be protected from moisture and corrosive gases.

14.13 Sampling Access

A. If sampling for testing or as a requirement for a permit will be required of effluent from a component other than the soil treatment area, an accessible sampling point shall be provided.

B. If sampling of the treated wastewater from the soil treatment area will be required for testing or as a requirement for a permit, a monitoring well or wells shall be constructed. Monitoring wells shall be located down gradient from the soil treatment area, accessible, and provided with a properly securable cover at or above the ground surface. Monitoring wells up gradient of the system may also be required. Lysimeters or other collection devices under the soil treatment area may be used instead of a monitoring well if approved by the Department or other issuer of a permit.

14.14 Distribution Boxes

A distribution box, if used, shall be of sufficient size to distribute effluent equally to the lateral lines of a trench or absorption bed system. The box shall be constructed with the inlet invert at least one (1) inch above the level of the outlet inverts. Flow equalizers or similar devices shall be used to adjust the flow between lines. Access to the box shall be provided with a manhole riser with access lid at or above grade if the top of the box does not reach final grade.

14.15 Drop Boxes

In sequential or serial distribution, a watertight box may be used to transfer the effluent to the following trench when the effluent in a trench has received the designed level for overflow to the next trench. A drop box shall have a riser at or above final grade, if the top of the drop box does not reach final grade. Outlet lines in sequential distribution shall be designed and installed so that they may be capped off for resting periods.

14.16 Step-down / Relief Lines

In sequential or serial distribution, an unperforated pipe may be used to transfer the effluent to the following trench when the effluent in a trench has received the designed level for overflow from that trench.

This Page Intentionally Left Blank.

15.0 Liquid Capacities For Septic Tanks

A. Sizing for residential capacity for new installation shall be based upon the number of bedrooms according to Table 15-1.

Table 15-1 MINIMUM SEPTIC TANK SIZE

Number of Bedrooms	Total Tank Capacity (gallons)	1st Compartment Capacity (min)
Up to 2	1000	500
3	1250	625
4	1500	750
5	1750	875
Each Additional	Add 250	add 125

B. For systems that remove toilet waste for separate treatment, tank capacity may be less than 1250 gallons if it provides a minimum of forty-eight (48) hours retention time.

C. For non-residential applications, a septic tank shall be sized to permit detention of incoming wastewater design flows for a minimum of forty-eight (48) hours.

D. Minimum tank size for non-residential facilities is 400 gallons.

E. Dosing tank capacity shall not be counted when considering septic tank capacity.

15.1 Identification and Data Marking

All septic tanks shall be permanently and legibly marked in a location for the purpose of inspection that is readily visible when inspected before backfilling. The marking inscription shall include the following:

A. Name of manufacturer;

B. Model or serial number, if available;

C. Effective volume and unit of measure;

D. Maximum depth of earth cover and external loads the tanks is designed to resist; and

E. Inlet and outlet identifications, if relevant.

15.2 Watertightness Requirements

Septic tanks, vaults, pump tanks, other treatment components, risers and lids shall not allow infiltration of ground water or surface water and shall not allow the release of wastewater or liquids through other than designed openings.

15.3 Watertightness Testing Methods

A. Acceptable watertightness testing methods performed at a manufacturer's site or in the field include water filling the tank or vacuum testing.

B. Testing of septic tanks shall be performed and evaluated as specified in Section 9 of ASTM C1227-12 for concrete tanks or in Standard IAPMO/ANSI Z1000-2007 for other prefabricated septic tanks.

C. Each unit shall be inspected in the field for conditions that may compromise its watertightness.

D. The inspection in the field shall be conducted by the Department and be performed after the tank installation but before backfilling.

E. If the inspection in the field indicates that the tank may be damaged or is not watertight, the inspector may require that the tank be tested for watertightness by the tank manufacturer or the System Contractor.

15.4 Proportions of Septic Tanks

A. A septic tank shall have two (2) or more compartments or more than one tank may be used in series. The first compartment of a two-compartment tank or the first tank in a series shall hold no less than one-half of the required effective volume.

B. A septic tank shall have a minimum of twenty-five (25) square feet of liquid surface area and have at least a six (6) foot separation between inlets and outlets. Septic tanks in series, combined, shall have a minimum of twenty-five (25) square feet of liquid surface area and the sum of the distances between inlets and outlets of all tanks shall be at least six (6) feet. The requirements for liquid surface area and separation between inlet and outlet may be waived for tanks with less than 750 gallons effective volume.

C. Liquid depth of a septic tank shall be a minimum of thirty (30) inches and the maximum depth shall not exceed the tank length.

D. At least one (1) access manhole no less than twenty (20) inches across shall be provided in each compartment of a septic tank.

E. The inlet invert shall be at least two (2) inches higher than the outlet invert.

F. An Inlet tee or baffle shall be provided and shall extend above the surface of the liquid at least five (5) inches and shall extend a minimum of eight (8) inches below the liquid surface.

G. Additional tees or baffles shall be provided on the inlet side of each divider wall in the tank;

H. The transfer of liquid from the first compartment to the second or successive compartment shall be made at a liquid depth of between thirty-five (35) and forty (40) percent of the liquid depth measured from the liquid surface. Liquid transfer shall not be made in the sludge zone.

I. The distance from the outlet invert to the underside of the tank top shall be at least ten (10) inches.

J. The outlet tee or baffle shall extend at least fourteen (14) inches below the outlet invert and, if needed, be modified to accommodate an effluent screen. The outlet tee or baffle that accommodates an effluent screen shall be located so that the effluent screen has sufficient clearance to be removed through the access opening with a riser in place. If an effluent screen cannot be fitted in the tank it may also be installed following the septic tank but before higher level treatment components or a soil treatment area.

15.5 Installation of Septic and Dose Tanks

A. Septic and dose tanks shall be transported, handled and set in accordance with the manufacturer's recommendations so as to avoid undue strain on the tank and the pipes entering and exiting the tank.

B. Risers shall:

1. Be installed per section 14.11, and

2. Be at least twenty (20) inch diameter for septic tanks and twenty-four (24) inch diameter for dosing tanks.

C. The tank shall be completely covered by backfill and no portion of the tank, except for the risers and lids, may remain exposed.

D. Septic and dose tanks, depending on type, shall be set as follows:

1. Concrete tanks shall be set on level ground with no protruding points or voids beneath the tank or per manufacturer's specifications, whichever is more stringent. Backfilling around the tank shall be done with sand, 3/4" rock or clean, dry native fill free of all organics, and rocks or clods no larger than three (3) inches in diameter, or per manufacturer's specifications, whichever is more stringent.

2. Fiberglass and plastic tanks shall be set to remain level on a bed of 3/4" rock a minimum of six (6) inches deep. Backfilling around the tank shall be with sand or 3/4" rock to a point halfway up the diameter of the tank and such that there are no voids between the tank and the backfill. The remainder of the tank shall be backfilled with sand, 3/4" rock, or clean, dry, native fill free of all organics, and rocks or clods no larger than three (3) inches in diameter, or per manufacturer's specifications, whichever is more stringent.

E. All areas disturbed by the installation of the septic tank shall be re-graded and re-seeded to control erosion.

F. Roof drains, foundation drains, water softener discharge lines, area drains or cistern overflows

shall not enter the tank or any part of the system and shall be placed in a manner which diverts water away from onsite wastewater treatment system.

G. Hot tubs, therapeutic or recreational bathing facilities shall be connected directly to a dosing chamber after the septic tank. A hot tub, therapeutic or recreational bathing facility may also be drained to a properly sized and located dry well or to the ground surface provided a design is developed and approved that will prevent any of the drainage from running off of the property or creating any erosion problem.

H. No structure shall be constructed over any portion of the septic tank, including, but not limited to, decking. Except that decks may be constructed over the tank provided sufficient evidence is submitted to the Department demonstrating no other location is feasible. Supporting piers for the deck shall not touch the tank itself and sufficient access openings in the deck surface shall be provided for routine maintenance and pumping of each compartment of the tank.

I. Septic and dose tank installation shall include terracing, larger diameter risers (with tank manufacturer approval), lower level lift stations, or other approved methods to keep the minimum diameter risers from exceeding four (4) feet in height.

15.6 Anchoring of Tanks

A. In locations where ground water or floodwaters may cause instability problems to the septic and dose tank, vault, or other treatment unit in the OWTS due to flotation, that component or unit shall be anchored in a manner sufficient to provide stability when the tank is empty. Risers shall be included in the buoyancy calculations.

B. If a manufacturer provides recommendations for anchoring designs, they may be used if they meet the conditions present at the site.

C. If a manufacturer does not provide recommendations for provisions to compensate for buoyancy, or if the professional engineer chooses to provide his/her own designs, the anchoring system design shall be prepared by the professional engineer.

15.7 Concrete Tank Structural Design

A. Concrete septic tanks shall comply with the structural design criteria of ASTM C1227-12 Standard Specifications for Precast Septic Tanks).

B. The design of each tank model and size by each manufacturer must be certified by a professional engineer as complying with these design and structural requirements and the watertightness standard of this regulation

C. Certification by a professional engineer must be submitted to the Division for acceptance.

D. Tanks slab lids or mid-seam tanks shall be sealed to be watertight.

E. Connections between tank and risers shall be sealed to be watertight.

15.8 Fiberglass, Fiberglass-Reinforced Polyester, and Plastic Tank Structural Design

A. All fiberglass, fiberglass-reinforced polyester, and plastic tanks shall meet the minimum design and structural criteria of IAPMO/ANSI Z1000-2007 (American Standards for Prefabricated Septic Tanks) and be certified by a professional engineer as meeting these standards. The professional engineer certifying the criteria must be registered or licensed in the United States, but need not be registered in Colorado.

B. All tanks shall be sold and delivered by the manufacturer or manufacturer's designated representative, preferably completely assembled. On-site tank assembly will be allowed on an as-needed basis.

C. Tanks shall be structurally sound and support external forces as specified in standard referenced above when empty and internal forces when full. Tanks shall not deform or creep resulting in deflection of more than five percent in shape as a result of loads imposed.

D. All tanks shall be constructed of sound, durable materials and not be subject to excessive corrosion, decay, frost damage, or cracking.

E. All seams or connections including to risers shall be sealed to be watertight.

15.9 Metal Tanks

The installation of metal tanks is prohibited.

15.10 Effluent Screens

A. An effluent screen shall be installed when a septic tank is installed.

B. The effluent screen shall be prior to the pump or siphon.

C. The effluent screen shall be provided with a handle located within twelve (12) inches of the tank lid to allow for removal and cleaning of the screen.

D. The effluent screen shall be cleaned at manufacturer-recommended intervals, or more often, if use patterns indicate.

15.11 Dosing Requirements

A. Dosing effluent to soil treatment areas is required:

1. For all new OWTS installations utilizing a soil treatment area,

2. When a dose system was part of the original design and needs repair, or

3. When a soil treatment area is being replaced or upgraded.

B. Dosing may be accomplished by means of a dosing siphon or a pump and may be demand or time based.

C. A dosing siphon or pump shall be installed in a separate tank following the septic tank and be of sufficient volume to allow pump or siphon cycling commensurate with the design capacity. The

use of a three-compartment septic tank, sized to provide effective volume in the first two (2) compartments is acceptable, with the siphon or pump in the third compartment. In this case, the baffle or wall between the second and third compartment shall be properly sealed to prevent cross-compartment flow.

15.12 Effluent Pump Systems

A. A design for the wastewater pumping system shall accompany the permit application. The design shall include a drawing and specifications sheet which has been approved by the designer.

B. Pumps shall be certified to the applicable UL or CSA electrical safety standard, bear the seal of approval of CSA, UL or an equivalent testing program and be constructed of corrosion resistant materials.

C. An automatic air release device shall be installed at high points in the pressure line where necessary to prevent air locking. Where possible, air releases shall be placed in vicinity of soil treatment area or within the dose tank.

D. In-vault pumps shall be provided with quick-disconnect joints within twenty-four (24) inches of the access lid to allow for routine removal for maintenance and replacement.

E. Splice Boxes shall:

1. Be located outside the pump system access riser and be accessible from the ground surface.

2. Have no wire splices made inside the tank, dosing chamber or riser. Wire splicing shall be completed with corrosion-resistant, watertight connectors.

F. Indicators of Pump Failure

1. A signal device shall be installed which will provide a recognizable indication or warning to the user that the pump is not operating properly.

2. This indication or warning shall be a visual signal and an audible signal and shall be located in a centralized area within visual and audible range of the system user.

3. Audible signals shall be located inside dwelling units unless the unit is remotely connected to a maintenance provider. If located on the exterior of a commercial structure, the signal device shall be enclosed in a waterproof housing and shall have a sound pressure level of at least eighty (80)decibels (dB) measured at twenty-four (24) inches from the housing.

4. Signal device shall be wired separate from the pump circuit (see Section 15.12.G).

5. The high water alarm switch shall be placed in the pumping station three (3) to six (6) inches above the switch that activates the pump.

G. The pump shall be connected to a control breaker that is separate from the high water alarm breaker, and from any other control system circuits, so that the pump operation is independent of the alarm. This separation shall be at the structure panel or sub-panel.

H. The pump system shall have a switch so the pump can be manually operated.

I. The pump system for pressure dosing and higher level treatment systems shall have a mechanism for tracking either the amount of time the pump runs or the number of cycles the pump operates.

J. Control panels shall be UL listed or equivalent.

K. Floats and Switches

1. Automatic liquid level controls shall be provided to start and shut off pumps at a frequency or level specified in the design.

2. Floats shall be mounted on a stem separate from the pump discharge piping to allow for removal, adjustment, and replacement of the float without removing the pump.

3. Float switches shall be certified to the applicable UL or CSA electrical safety standard, bear the seal of approval of CSA, UL or an equivalent certification program and be constructed of corrosion resistant materials.

15.13 Tank Abandonment

A. Tank abandonment must meet requirements of section 19.4.

This Page Intentionally Left Blank.

	SOIL TREATMENT AREAS (STA)	**Section 16**

16.0 General Requirements

A. The size and design of the STA shall be based on the results of the site and soil evaluation, design criteria, and construction standards for the proposed site and OWTS selected.

B. All STA's must have effluent dosed by a pump or siphon. Gravity trickle feeding method is prohibited where a new, upgraded or replacement STA is installed.

16.1 Calculation of Infiltrative Surface of Soil Treatment Area

A. The LTAR used to calculate the infiltrative surface area shall have been obtained according to parts 12.4.B. and 12.5.F of these regulations.

B. The infiltrative surface of a trench or bed receiving any treatment level of effluent is only the bottom area. No sidewall credit is allowed except in deep gravel trenches and seepage pits that are permissible in repairs.

C. Long term acceptance rates (LTARs) are shown in Appendix C.

D. Factors for adjusting the size of the STA are in Tables 16-1 and 16-2.

E. The required area for STA is determined by the following formula:

$$\frac{\textbf{Design Flow (gallons per day)}}{\textbf{LTAR (gpd/sq. ft.)}} = \textbf{Required STA (sq. ft.)}$$

E. The adjusted STA is the required STA multiplied by the Size Adjustment Factors:

1. The Size Adjustment Factors for methods of application are in Table 16-1.

2. The Size Adjustment Factors for types of storage / distribution media are in Table 16-2.

F. A required soil treatment area receiving TL1 effluent may be multiplied by one factor from Table 16-1, Table 16-2, or both.

G. A soil treatment area receiving TL2, TL2N, TL3 or TL3N effluent must be pressure dosed. The distribution mediation in Table 16-2 may be used for distribution of higher level treatment system effluent but an additional reduction factor from Table 16-2 shall not be used.

16.2 Allowable Soil Treatment Area Reductions and Increases:

A. The soil treatment area size determined by dividing the design flow rate by the long-term acceptance rate may be adjusted by factors for method of treatment, soil treatment area design, and type of distribution media.

B. For the purpose of the Table 16-1 C, a "baseline system," i.e. adjustment factor of 1.0, is considered to be Treatment Level 1 (TL1) effluent dosed to a gravel or tire chip filled trench.

C. The maximum reduction from all combined reductions including higher level treatment shall be no greater than fifty (50) percent of the baseline system required for a soil treatment area.

Table 16-1 SIZE ADJUSTMENT FACTORS FOR APPLICATION METHODS IN SOIL TREATMENT AREAS

Type of Soil Treatment Area	Method of Effluent Application	
	Dosed- TL1 only (Siphon or Pump)	Pressure Dosed TL1-TL3N
Trench	0.9	0.8
Bed	1.1	1.0

Table 16-2 SIZE ADJUSTMENT FACTORS FOR TYPES OF DISTRIBUTION MEDIA IN STA'S ACCEPTING TREATMENT LEVEL 1 (TL1) EFFLUENT (Not for use with TL2-TL3N)

Type of Soil Treatment Area	Type of Storage/Distribution Media Used in Soil Treatment Area		
	Rock or Tire Chips	Manufactured Media Other Than Chambers	Chambers
Trench or Bed	1.0	0.9	0.7

16.3 Design of Soil Treatment Areas – General Requirements

A. The infiltrative surface and distribution lines within the STA shall be level.

B. Effluent shall be applied to the STA by a dosing device when installing a new, upgraded or repaired STA. When a septic tank is replaced on an existing OWTS that was not originally designed for dosing, the applicant shall have the option of connecting to the existing STA without installing a dosing device.

C. The infiltrative surface shall be no deeper than four (4) feet unless adequate treatment at a deeper level can be demonstrated and is approved by the Department. The depth of the infiltrative surface will be measured on the down slope side of the trench or bed excavation.

D. Trenches shall follow the ground surface contours so variations in infiltrative surface depth are minimized. Beds shall be oriented along contours to the degree possible.

E. A final cover of soil at least twelve (12) inches deep shall be placed on top of the geotextile or similar pervious material in a rock and pipe system, chamber, or manufactured media up to the final surface grade of the soil treatment area. Soil must be suitable for revegetation.

F. Following construction, the ground surface shall be graded to divert storm water runoff or other outside water from the soil treatment area. The area shall be protected against erosion. Subsurface drains upslope of the soil treatment area may be installed to divert subsurface flow around the area per section 16.18 and Appendix A.

G. Backfilling and compaction of soil treatment areas shall be accomplished in a manner that does not impair the intended function and performance of the storage/distribution media and soil and distribution laterals, allows for the establishment of vegetative cover, minimizes settlement and maintains proper drainage.

H. Soil replacement is permitted to bring the soil within the requirements of suitable soil and meet the following requirements:

1. Be designed by a professional engineer,

2. Replacement soil must meet the specifications of sand filter media, as specified in section 17.2.B.1.a-b. The loading rate for sand filters must be used,

3. Added soil/sand must be completely settled prior to installation of components as specified and approved by the design engineer, and

4. Pressure distribution must be used.

J. Horizontal distance separations between STAs and various physical features are shown in Appendix A.

K. Minimum vertical separation distance from the STA infiltrative surface to groundwater or a limiting layer shall be four (4) feet, except as provided for in Table 16-3.

TABLE 16-3 – MINIMUM VERTICAL SEPARATION BETWEEN STA INFILTRATIVE SURFACE AND GROUNDWATER OR A LIMITING LAYER

	Treatment Levels				
Type of STA	**TL1**	**TL2**	**TL2N**	**TL3**	**TL3N**
Trenches or Beds	4 (3)[1]	4 (3)[1]	2	2	2
Unlined Sand Filters	4(3)[1]	2[2]	2[2]	2[2]	2[2]
Mounded Sand Filters	2	2[2]	2[2]	2[2]	2[2]

TABLE NOTES

1. If pressure dosed
2. The bottom of the sand layer must be at or above the high ground water surface or bedrock for installations in which effluent is percolated downward through the soil

L. For repairs to existing systems where space is not available or there are other site limitations, Section 16.18 provides alternative design methodologies for soil treatment areas.

16.4 Distribution Lines

A. Distribution of effluent between lines in a soil treatment area shall be as even as possible. Uneven settling of portions of the distribution system following construction shall be addressed by provisions in the design to adjust flows between lines.

B. Pipe for non-pressure distribution must be no less than three (3) inches in diameter.

C. Distribution lines shall be a maximum of 150 feet long.

D. Distribution lines longer than one hundred (100) feet shall be pressure dosed or the application of the effluent shall be at the center of the line.

E. The end of a distribution pipe shall be capped, unless it is in a bed or trenches in a level soil treatment area, where the ends of the lines may be looped.

16.5 Inspection Ports

A. An inspection port accessible from ground surface shall be installed at the beginning and end of each trench. For beds, inspection ports shall be installed at each of the four (4) corners and no greater than fifty (50) feet apart. The bottom of the inspection port tube shall extend to the infiltrative surface and not be connected to the end of the distribution pipe. That portion of the tube in contact with the distribution media shall be perforated. Inspection ports in chambers may be installed according to manufacturer's instructions if the infiltrative surface is visible or can be measured from the inspection port.

B. Additional inspection ports may be connected to the distribution pipes.

C. The top of inspection ports may be below the final grade of the surface if each has a cover at the surface such as a valve box for a lawn irrigation system.

16.6 Trenches

A. Trenches shall be three (3) feet wide or less.

B. The separating distance between trenches shall be a minimum of six (6) feet sidewall-to-sidewall.

C. Perforated distribution pipe used in a trench shall be placed as close to the center of the trench as possible.

D. Perforations shall be oriented downward unless pressure distribution is used and provision for pipe drainage is included.

16.7 Beds

A. Maximum width for a bed shall be twelve (12) feet, unless the bed receives effluent meeting TL2 or better, or for repairs to existing systems as provided for in Section 16.18.

B. The separating distance between beds shall be a minimum of six (6) feet sidewall-to-sidewall.

C. The separating distance between parallel distribution lines in an absorption bed shall not exceed six (6) feet and a distribution line shall be located within three (3) feet of each sidewall and end wall of the absorption bed.

16.8 Serial and Sequential Distribution

A. A serial or sequential distribution system may be used where the ground slope does not allow for suitable installation of a single level soil treatment area unless a distribution box or dosing chamber is used.

B. The horizontal distance from the side of the absorption system to the surface of the ground on a slope shall be adequate to prevent lateral flow and surfacing.

C. Adjacent trenches or beds shall be connected with a stepdown / relief line or a drop box arrangement such that each trench fills with effluent to the top of the gravel or chamber outlet before flowing to succeeding treatment areas.

16.9 Storage / Distribution Media

A. Distribution Media (Rock/Tire Chips) and Pipe

1. The pipe shall be surrounded by approved distribution media material. At least six (6) inches of media shall be placed below the pipe. The media shall fill the trench or bed around the pipe and at least two (2) inches above the top of the distribution pipe.

2. The top of the media shall be covered with non-woven permeable geotextile meeting a maximum thickness rating of 2.0 ounces per square yard or equivalent pervious material. An impervious covering shall not be used.

3. Approved distribution media shall be clean and have the following composition:

a. Aggregate:

Standard Sieve Size	Percent Passing by Weight
2 ½ - inch	100%
¾- inch	0-20%
No. 4	0-3%

b. Tire Chips:

i. Tire chips shall be nominally two (2) inches in size and may range from half (1/2) inch to a maximum of four (4) inches in any one direction.

ii. Wire strands shall not protrude from the tire chips more than three quarter (3/4) inches.

iii. Tire chips shall be free from balls of wire and fine particles less than two (2) millimeters across.

B. Chambers

1. Installation shall be according to manufacturer's instructions provided that those instructions are no less stringent than these Regulations.

2. Chambers shall be installed with the base on the infiltrative surface.

3. A distribution pipe shall be placed extending the length of the chambers and may be either suspended or left in contact with the ground.

4. Except for higher level treatment units, effluent may be distributed by non pressurized dosing or pressure dosing.

C. Manufactured Media

1. Manufactured media shall be installed with the base on the infiltrative surface.

2. Installation shall be according to manufacturer's instructions.

3. Effluent may be applied by pressure distribution only if the manufacturer specifies suitability of the product for that use.

16.10 Drip Distribution Systems

A. The infiltrative surface area shall be calculated using the long-term acceptance rate for the site or a more conservative value if recommended by the manufacturer.

B. Drip tubing shall be installed on manufacturer's spacing recommendations.

C. Drain back shall be provided for all drip tubing, pipes and pumps.

D. Provisions shall be made to minimize freezing in the distribution lines, drip tubing, relief valves, and control systems.

E. Provisions shall be made for back flushing or other cleaning.

16.11 Pressure Distribution

A. Design of pressure distribution systems shall include:

1. Dose size and frequency for flows and soil (or media long-term acceptance rate);

2. Pipe diameter and strength requirements;

3. Orifice size and spacing;

4. Pump specifications; and

5. Distal pressure head.

B. Cleanouts shall be installed at the end of each line.

16.12 Non Pressurized Distribution

A. Non pressurized distribution includes, but are not limited to:

1. Systems utilizing a siphon, and

2. Systems that utilize a pump where the purpose of the pump is to lift the effluent to a high point after which point the effluent flows to the distribution piping by gravity. The distribution piping is not filled to the point of pressurizing the piping and orifices.

B. Designs for non pressurized distribution systems shall include:

1. Dose size and frequency for flows and soil (or media long-term acceptance rate);

2. Pipe diameter and strength requirements;

3. Orifice size and spacing; and

4. Siphon or pump specifications.

C. Distribution laterals shall be no less than three (3) inches in diameter.

16.13 Evaporation and Evapotranspiration / Absorption Systems

Evaporation and Evapotranspiration/Absorption Systems are prohibited due to extended periods of snow cover and the short growing (transpiration) season.

16.14 Sand Filters/Mounds– Unlined

See Section 17.

16.15 Alternating and Sequencing Zone Systems

A. Alternating Systems

1. An alternating system must have two (2) zones that must be alternated on an annual or more frequent basis.

2. Each section must be a minimum of fifty (50) percent of the total soil treatment area. Size adjustment factors for methods of effluent application or type of distribution media shall not be allowed.

3. A diversion valve or other approved diversion mechanism may be installed on the septic tank effluent line allowing soil treatment area sections to be alternated.

4. The diversion mechanism must be readily accessible from the finished grade.

B. Sequencing Zone Systems

1. Sequencing zone systems have more than two (2) soil treatment area sections that are dosed on a frequent rotating basis.

2. Where soil conditions are similar between the sections, each section area shall be the same size. If soil conditions are such that long-term acceptance rates are different, each section may be sized for the same dose, but different long-term acceptance rates.
3. An automatic distribution valve must be used.

4. Dosing of each system must be evaluated by the designer based on projected daily flow rates, number of zones, and soil types.

16.16 Subsurface Drains(See Figures 2 and 3)

A. Subsurface drains shall be designed by a Professional Engineer and shall only be installed to divert infiltration from snowmelt and precipitation events, and channelized or perched subsurface water. At no time shall a subsurface drain be used to dewater a permanent groundwater table.

B. Subsurface drains shall maintain the minimum horizontal distances set forth in Appendix A.

C. Plans shall include installation depth, ground slope, and requirement to discharge drainage to the ground surface.

D. Subsurface drains shall be excavated to a minimum depth of at least five (5) feet below the bottom of the proposed absorption system and be a minimum of eighteen (18) inches wide.

E. Subsurface perforated drainpipe shall:

1. Be perforated and must have a minimum diameter of four (4) inches.

2. Shall only be installed up gradient from the absorption area.

3. Have a minimum slope of five-tenths of a percent (0.5%).

4. Be equivalent to or more rigid than PVC ASTM specification 2729.

5. Be placed in a layer of aggregate as specified in Section 16.9.A with a minimum thickness of twelve (12) inches.

6. A layer of free draining material of no greater than 8 inch diameter, with no more than five percent (5%) fines, shall be placed over aggregate to six (6) inches below the natural grade.

7. The trench shall be backfilled with six (6) inches of native soil above the free-draining material to natural grade.

F. Piping installed at or down gradient from an absorption area shall be solid pipe equivalent to or more rigid than PVC ASTM specification 2729. It shall be bedded with native soil containing no stones larger than three (3) inches. The remainder of the trench shall be backfilled with native material. In all cases, these trenches shall maintain or exceed the minimum setback distances of the drainpipe.

G. The native soil shall be graded to deflect precipitation and allow for settlement.

H. A rodent proof screen is required at daylight of piping to prevent nesting.

I. Subsurface drains designed to any other specifications shall be approved by the Department prior to the issuance of a permit.

Figures 2 and 3
Typical Subsurface Drain

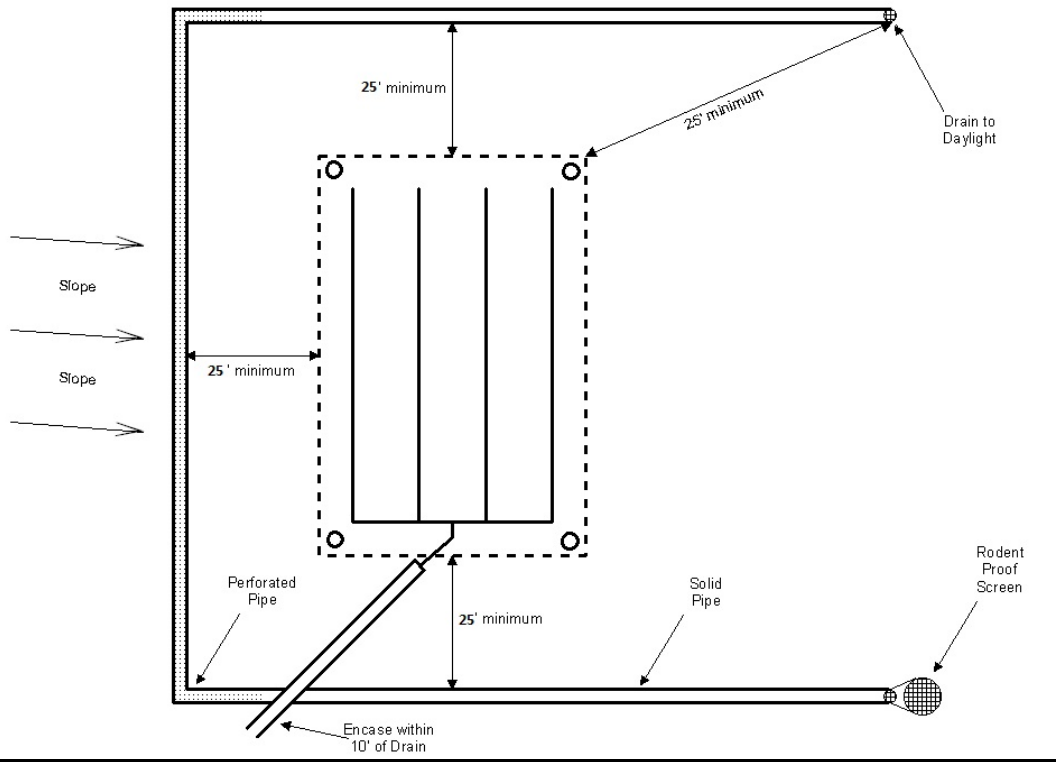

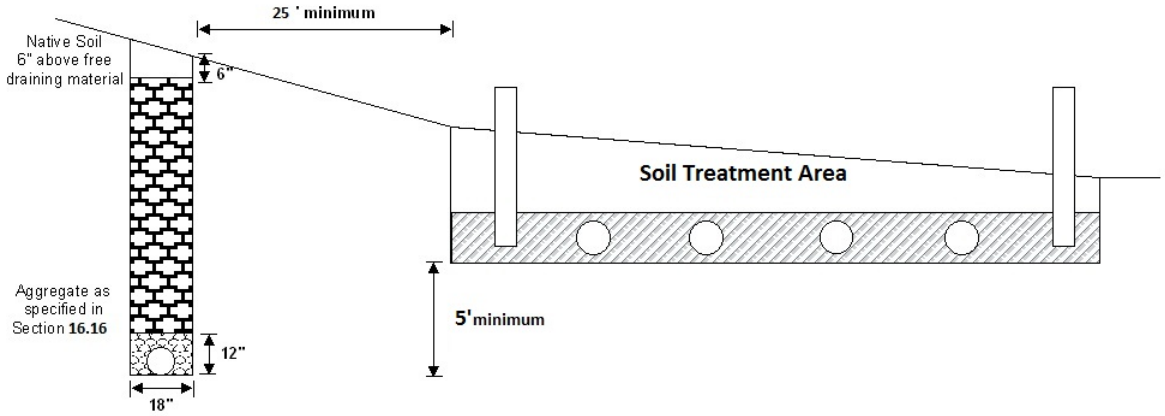

16.17 Retaining Walls/Liners(See Figure 4)

A. Retaining walls must be constructed per Summit County Engineering Department requirements.

B. Where the retaining wall incorporates a liner:

1. The liner material in the retaining wall shall be constructed of at least a 30 mil (0.03 in) membrane or an equivalent impermeable material.

2. Where liner involves seams, they shall be watertight construction.

3. Liner must extend a minimum of 6” below undisturbed soil at the base of the retaining wall.

Figure 4: Typical Retaining Wall

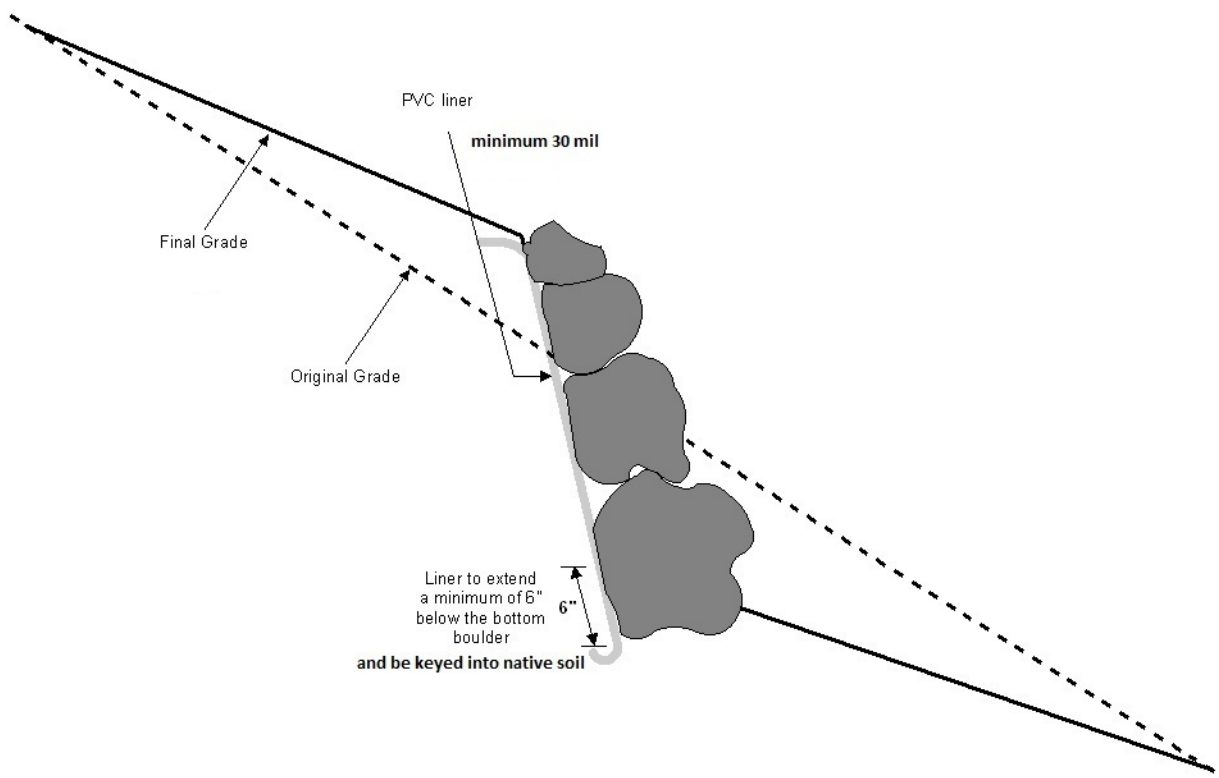

16.18 Repairs to Existing Systems

A. When space is not available or if there are other site limitations that preclude other soil treatment area options for OWTS repairs; wide beds, deep gravel trenches and seepage pits may be considered for repairs only. Another option to consider is a higher treatment level system.

B. Wide Beds: For repairs, beds may be wider than twelve (12) feet, without being required to receive effluent meeting TL2 or better.

C. Deep Gravel Trenches or Beds: The length of an absorption trench or bed may be calculated by allowance for the sidewall area of additional depth of gravel in excess of six (6) inches below the bottom of the distribution pipe.

1. Formula for adjusting the length of deep-gravel trenches:

$$\mathbf{L \times \frac{(W+2)}{(W+1+2D)} = Adjusted\ Length}$$

Where:

L = length of trench or bed prior to adjustment for deep gravel

W = width of trench or bed in feet

D = additional gravel depth (ft) in excess of the minimum required six inches of gravel below the distribution pipe (maximum allowable additional gravel depth is five feet).

2. Maximum allowable additional depth is five (5) feet.

3. Percolation tests and soil profile excavation test pit evaluations shall be performed at the proposed infiltrative surface depth.

4. The reduction in field size area with the use of chambers shall not be applied to deep gravel systems.

D. Seepage Pits

1. For repairs to existing systems, the potential for risk to public health and water quality may be evaluated by the Department. If risk is low in the determination of the Department, a seepage pit without higher level treatment may be used.

2. If the risks are not low, higher level treatment of at least TL2 shall be attained prior to discharge to these systems for final disposal.

3. A seepage pit shall consist of a buried vertical cylinder with holes in the wall. This may consist of a stack of perforated concrete rings or other suitable materials.

4. Pits shall be provided with both vertical sidewall and top supporting structural concrete or other material of equal structural integrity.

5. The excavation shall be larger than the cylinder by at least twelve (12) inches on each side.

6. The space between the cylinder wall and the edge of the excavation shall be filled with rock ranging in size from 0.5 inch to 2.5 inches.

7. The capacity of the pit shall be computed on the basis of long-term acceptance rates determined for each stratum penetrated. The weighted average of the results shall be used to obtain a design figure.

8. Soil strata in which the percolation is slower than thirty (30) minutes per inch shall not be used for absorption or seepage. These strata shall not be included in the weighted average to determine the long-term acceptance rate.

9. The infiltrative surface of the pit is the vertical wall area (based on dug perimeter) of the pervious strata below the inlet plus the bottom area inside the vertical cylinder.

10. The bottom infiltrative surface must meet the minimum separation requirements to bedrock or groundwater outlined in Table 16-1 and Appendix D for Trenches or Beds.

11. Pits shall be separated by a distance equal to three times the greatest lateral dimension of the largest pit. For pits over twenty (20) feet in depth, the minimum space between pits shall be twenty (20) feet.

12. The construction of new seepage pits for the treatment and dispersal of on-site wastewater on new sites is prohibited unless:

    a. Designed by a professional engineer; and

    b. The design includes higher level treatment of at least TL2.

This Page Intentionally Left Blank.

17.0 General Requirements

A. Higher level treatment system designs, with the exception of Intermittent Sand Filters, covered in Section 17.2.B, require BOH variance up until January 1, 2015. After this date they may be permitted by the Department with design and maintenance that meets these regulations.

B. Higher level treatment systems must be designed by a professional engineer.

C. Higher level treatment systems may be public domain technology systems or proprietary systems.

   1. Public domain technology systems shall be designed, installed and maintained according to established criteria and any additional criteria established by the Department. When design criteria are not specifically provided in these Regulations, the criteria used in the design shall be from a reference commonly used as an industry standard and the criteria shall be cited in the design. Public domain systems require review and approval by the Board of Health.

   2. Proprietary systems shall be designed, installed, and maintained according to manufacturer's instructions and additional criteria identified by CDPHE as part of their Technology Review and Acceptance process.

D. Soil treatment areas for higher level treatment systems shall be pressure dosed.

E. All systems shall be capable of accommodating all anticipated flows and organic loads.

F. Ventilation and air systems: Mechanical components shall be installed in a properly vented location and all vents, air intakes, and air hoses shall be protected from snow, ice, or water vapor accumulations.

G. All systems shall be installed to include protection of openings against entry of insects, rodents, other vectors and unauthorized people.

H. Effective January 01, 2015, An operating permit shall be required for any system, new or existing, that includes a higher level treatment unit, as defined by these Regulations. Systems that incorporate only pumps or lift stations, such as Intermittent Sand Filters covered in Section 17.2.B, are exempt from the requirements of this section. See Section 11.

I. For higher level treatment systems or other components under a service contract, a clearly visible, permanently attached label or plate giving instructions for obtaining service shall be placed at a conspicuous location.

17.1 Treatment Levels for Higher Level Treatment Systems

A. Treatment levels for proprietary systems shall be assigned by CDPHE based on their Technology Review and Acceptance process (see Regulation 43.13) and shall be used to size the soil

treatment area in accordance with Section 16. Proprietary systems cannot be approved for use until that process has been completed and a treatment level assigned.

B. Treatment levels for public domain higher level treatment systems are shown in Table 17-1.

Table 17-1 TREATMENT LEVELS FOR PUBLIC DOMAIN HIGHER LEVEL TREATMENT SYSTEMS

Type of System	Treatment Level	Design Criteria
Lined Sand Filters (single pass)	TL3	Section 17.2
Lined Sand Filters (recirculating)	TL3N	Section 17.2
Mounded Sand Filters (mound systems)	TL2	Section 17.2

17.2 Sand Filters

A. Sand filters, such as a lined intermittent sand filter or recirculating sand filter, may be used as a pre-treatment system where the treated effluent is collected and dispersed to a soil treatment area or where site conditions require importing treatment media, such as an unlined sand filter, a soil replacement system, or a mounded system.

B. Intermittent (Single Pass) Sand Filters

1. General

a. The filtering material used in a sand filter must be clean, coarse sand, all passing a screen having four (4) meshes to the inch. The sand must have an effective size between 0.25 and 0.60 mm. The uniformity coefficient must be 4.0 or less. Material meeting ASTM 33, for concrete sand, with one percent or less fines passing 200 mesh sieve may be used.

b. Installation of sand filters shall be limited to the months of June, July, August and September unless waived by the Department when proper weather conditions exist which prevent the sand materials from freezing.

c. The sand below the distribution lines must be at least two (2) feet deep.

d. Distribution system

(i) Dispersal of effluent to the surface of the sand filter must be by a pressurized distribution system for equal distribution.

(ii) Lined Sand Filters: Pipes used to disperse the effluent must be surrounded by washed coarse screened gravel or crushed stone. All of the gravel or stone must pass a 2 1/2-inch screen and must be retained on a 3/4-inch screen. The separation distance between parallel distribution lines must not exceed six (6) feet, and a distribution line must be located within three (3) feet of each filter sidewall.

(iii) Unlined Sand Filters and Mounds shall meet soil treatment area requirements of Section 16.

(v) Manufactured media may be used as an alternative to gravel or stone.

e. Application Rates

(i) When receiving wastewater that meets TL1 treatment level, a maximum sand filter application rate of 1.0 gpd/ft^2 must be used.

(ii) When receiving wastewater that meets TL2, TL2N, TL3, or TL3N treatment levels, the sand filter must be sized based on the long-term acceptance rate for Soil Type 1.

(iii) An intermittent sand filter must not be used to treat wastewater that does not conform to TL1 treatment level or better.

2. Lined Sand Filters

a. Lined sand filters must have an impervious liner on the sides and bottom of the filter. The liner must consist of a 30 mil thickness PVC material or equivalent.

b. A minimum four-inch diameter under-drain pipe must be used. The under-drain pipe must be surrounded by washed coarse screened gravel or crushed stone. All of the gravel or stone must pass a 2 1/2 inch screen and must be retained on a 3/4-inch screen. Manufactured media may be used as an alternative to gravel or stone.

c. Under-drain effluent collected below the sand filter shall be dispersed to a soil treatment area. The soil treatment area receiving the sand filter effluent may be sized with a long-term acceptance rate for TL3 effluent.

3. Unlined (Open Bottom) Sand Filters

a. The bottom of the sand filter receiving TL1 must be no less than two (2) feet above the high ground water surface or bedrock for installations in which effluent percolates downward through the soil.

b. The bottom of the sand bed receiving TL2, TL2N, TL3 or TL3N must be at or above the high ground water surface or bedrock.

c. An unlined sand filter is to be sized based on Section 17.2.B.1.e.(i) or the long-term acceptance rate of the receiving soil for TL3, whichever results in the larger area.

4. Mounded Sand Filters (Mound Systems)

a. When the infiltrative surface area of the media receiving wastewater effluent is above the natural ground surface, the system shall be considered a mounded sand filter.

b. The sand thickness must be at least two (2) feet.

c. The treatment level for mounded sand filters is TL2 and does not need an additional two (2) feet, as unlined sand filters do.

d. Mounded sand filters must conform to Section 17.2.B.3 for unlined (open bottom) sand filters.

e. The gravel area and linear loading rate must be determined from the loading rate for the soil type under the mound and the slope of the site.

f. Horizontal setbacks, as required in Appendix A, are measured from the gravel area.

g. The final slope of the mound must be no greater than three (3) feet horizontal to one (1) foot vertical (3:1) or steeper as allowed per Section 16.17.

h. The surface of the mounded area must be planted with a suitable vegetative cover.

Figure 5
Typical Mounded OWTS STA

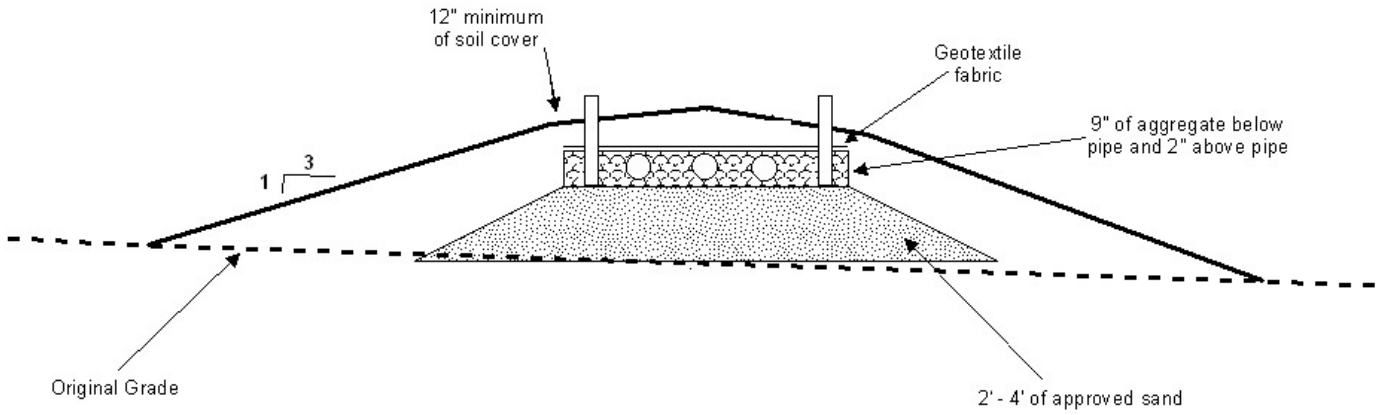

C. Recirculating Sand Filters

1. A recirculating sand filter must have an impervious liner on the sides and bottom of the filter. The liner must consist of a 30 mil thickness PVC material or equivalent.

2. A minimum four (4) inch diameter under-drain pipe must be used. The under-drain pipe must be surrounded by washed coarse screened gravel or crushed stone. All of the gravel or stone must pass a 2 1/2-inch screen and must be retained on a 3/4-inch screen. Manufactured media may be used as an alternative to gravel or stone.

    a. Filter media effective size (D10) must range from 1.0 to 1.50 mm and the uniformity coefficient (D60/D10) must be less than 4.0. Fines passing a 200 mesh sieve must be less than one (1) percent.

3. Sand depth must be a minimum of two (2) feet.

4. Installation of sand filters shall be limited to the months of June, July, August and September unless waived by the Department when proper weather conditions exist which prevent the sand materials from freezing.

5. Typical loading rates are 3.0 to 5.0 gpd/ ft^2. Rate must not exceed 5.0 gpd/ ft^2.

6. Design re-circulation ratios may be 3:1 to 5:1.

7. Effluent collected from the sand filter must be discharged to a soil treatment area. The soil treatment area receiving the sand filter effluent may be sized with a long-term acceptance rate for TL3N effluent.

17.3 Rock Plant Filter (Constructed Wetland)

Rock Plant Filters are not considered Higher Level Treatment systems. See Section 18.5.

This Page Intentionally Left Blank.

18.0 General Requirements

Design criteria and construction standards for alternate systems shall be sufficient to exclude flies and rodents from access to human excreta, prevent nuisances and health hazards, provide for cleanliness of such facilities, and prevent ground or surface water pollution.

18.1 Composting Toilets

A. An approved composting toilet shall treat deposits of feces, urine, and readily decomposable household garbage that are not diluted with water or other fluids and are retained in a compartment in which aerobic composting will occur.

B. Only manufactured composting toilets meeting NSF/ANSI 41, or an equivalent testing program, may be installed.

C. A system to collect and dispose of gray water shall be provided for composting toilets that generate gray water and when gray water is generated from other sources within the facility. Such a system is subject to permitting, installation and use requirements of these Regulations.

D. The composting toilet may be located within a dwelling or building provided that:

   1. It is specifically designed for interior use;

   2. It complies with the applicable requirements of these Regulations and the local building code; and

   3. The installation will not result in conditions considered to be a health hazard as determined by the Department.

E. The effective volume of the composting toilet receptacle shall be sufficient to accommodate the number of persons served in the design of the unit installed. The effective volume of the unit shall include sufficient area for the use of composting materials which shall not be toxic to the process or hazardous to persons and which shall be used in sufficient quantity to assure proper decomposition.

F. Residue from the composting toilet shall be removed when it is filled to seventy-five (75) percent of capacity. Residue from the unit shall be properly disposed of by methods recommended by the manufacturer and acceptable to the Department. Disposal methods shall prevent contamination of water and not cause a public health nuisance.

G. If a system will be installed where low temperature may be a factor, design and installation shall address the effects of the low temperature.

H. Composting toilets shall be operated according to manufacturer's specifications.

18.2 Incinerating Toilets

A. An approved incinerating toilet shall be designed and installed in accordance with all applicable federal, state, and local air-pollution requirements and manufacturer’s instructions. Incineration toilets shall meet the requirement of NSF P157 or equivalent

B. A system to collect and dispose of gray water shall be provided when gray water is generated from other sources within the facility. Such a system is subject to permitting, installation and use requirements of these Regulations.

18.3 Pit (non-vaulted) Privies

A. The construction of new pit privies is prohibited.

B. For existing pit privies, the bottom of the pit must be located above at least four (4) feet of suitable soil and four feet above a limiting condition.

C. Existing pit privies will be allowed to remain in use with written approval from the Department. Approval will be limited to the following situations:

   1. Facilities with limited use occupancy, and

   2. Facilities with no water supplied fixtures.

D. Existing Pit Privies must be upgraded to a Vaulted Privy, minimum, prior to the Department approving any activities taking place at the property that require a building permit or Planning Department approval.

18.4 Chemical Toilets

A. Use of portable chemical toilets (aka porta potties) in permanently occupied buildings is prohibited except during construction or under emergency circumstances as determined by the Department. Proper ventilation of a chemical toilet used inside shall be required.

B. Portable chemical toilets are not required to obtain a permit from this Department.

C. Portable chemical toilets must be maintained in good physical condition and in a sanitary condition to reduce the potential for disease transmission or nuisance conditions.

D. Contents must be held within the unit and disposed of at a facility approved by the Department.

18.5 Rock Plant Filter (Constructed Wetland)

A. A rock plant filter system shall be designed by a professional engineer.

B. The design shall be site specific and include specifications for: loading, capacity, dimensions, liner material, filter media, effluent depth and depth control mechanism, density and species of plant material, and other site specific information.

C. All constructed wetland systems shall be designed to ensure subsurface flow through the treatment area.

D. Components shall be designed to minimize the potential of freezing.

E. The treated effluent from a rock plant filter shall be distributed to a soil treatment area.

F. Although capable of producing higher level treatment, rock plant filters shall not be assigned a treatment level higher than TL1 because of system and seasonal variability.

18.6 Vaults

A. Vaults for residential new construction are prohibited.

B. Vaults may be permitted for residences where an existing vault has failed and the property cannot accommodate a soil treatment area. In considering whether the property can accommodate a soil treatment area, the applicant must successfully demonstrate to the Department that the risk of having a non conforming STA (BOH variance required) outweighs the risk associated with having a vault (overflowing, etc.).

C. Vaults may be permitted to serve limited use non-residential facilities where the installation of an OWTS with soil treatment area cannot conform to these regulations or where water is hauled to the facility due to the lack of a permanent water supply.

D. Risers shall be installed per section 15.8.B.

E. Vaults may be permitted for systems where some of the wastewater flows are separated, such as toilet wastes only, into a vault. The portion not retained in the vault shall be treated in an adequately-sized OWTS.

F. Vaults for non-residential use shall have a minimum 500 gallon effective volume or be capable of holding a minimum of the two-day design wastewater flow, whichever is larger.

G. Vaults for residential use (see Section 18.6.B) shall have a minimum 1,000 gallon effective volume or be capable of holding a minimum of the two-day design wastewater flow, whichever is larger.

H. Indicator of capacity.

1. A signal device shall be installed which will provide a recognizable indication or warning to the user that the vault needs to be pumped.

2. This indication or warning shall be a visual signal and an audible signal and shall be located in a centralized area within visual and audible range of the system user.

3. Audible signals shall be located inside dwelling units unless the unit is remotely connected to a maintenance provider. If located on the exterior of a commercial structure, the signal device shall be enclosed in a waterproof housing and shall have a sound pressure level of at least eighty (80) decibels (dB) measured at twenty-four (24) inches from the housing.

4. The signal shall be set to indicate at a maximum of seventy-five (75) percent capacity.

I. Concrete vaults shall meet the strength and watertightness requirements for septic tanks and shall meet the same installation and construction standards that apply to septic tanks, except that the vault shall contain a single compartment and no effluent outlet shall be provided.

J. Prefabricated fiberglass, fiberglass-reinforced polyester, and plastic tanks may be used as vaults, if the tank manufacturer provides testing criteria certifying them for this use.

K. Vaults shall be located in an area that is readily accessible for routine pumping during all seasons of the year as documented by a letter from a Systems Cleaner.

L. Vaults used in conjunction with a gray water system, shall be placed at least five (5) feet away from the gray water septic tank and such that the top of the vault is one (1) foot horizontally below the top of the gray water tank, unless it can be demonstrated to the satisfaction of the health officer that a connection between the vault and the gray water tank cannot readily be made.

M. Permanent water conservation devices shall be installed on all water use fixtures.

N. The owner of the vault shall maintain copies of all pumping receipts for a period of three (3) years and shall furnish copies to the Department upon request.

O. All buildings served by a vault shall be connected to an approved sewage treatment works within one hundred-eighty (180) days after the sewage treatment works become available.

P. Abandoned vaults shall be disposed of according to Section 19.4 of these Regulations.

Q. Anchoring of Vaults shall be per section 15.9.

18.7 Vaulted Privy

A. Vaulted privies may be permitted:

1. For non-residential facilities with no water supplied fixtures, unless an approved alternative system is proposed for non toilet water from these fixtures, or

2. To replace an existing residential pit privy under the following circumstances:

   a. Limited Use Occupancy as demonstrated by an Agreement document signed by the owner and agreeable to the Department, and

   b. No water supplied fixtures in the facility, unless an approved alternative system exists for receiving non toilet water from these fixtures.

B. The continued use of a residential vaulted privy is permitted under the following circumstances:

1. Limited Use Occupancy as demonstrated by an Agreement document signed by the owner and agreeable to the Department, and

2. No water supplied fixtures in the facility, unless an approved alternative system is receiving non toilet water from these fixtures.

C. A vaulted privy shall be built to include:

1. Fly- and rodent-tight construction,

2. A superstructure affording complete privacy,

3. An earth mound around the top of the vault and below floor level that slopes downward away from the superstructure base for the purpose of diverting surface water away from the vault privy;

4. A floor, and a riser of concrete or other impervious material with hinged seats and covers of easily cleanable, impervious material;

5. A hinged, self closing door;

6. Venting that is fly-proofed with No. 16 or tighter mesh screening; and

7. An effective volume of the vault shall be no less than 400 gallons and constructed of concrete or plastic. The vaults for privies shall meet the structural and watertightness standards of vaults.

D. Abandoned vault privies shall be disposed of according to Section 19.4 of these Regulations.

E. Anchoring of vault privies shall be per section 15.9.

18.8 Wastewater Ponds

A. Wastewater ponds shall meet the requirements set forth in Section 43.12.C of Regulation 43, and

B. Shall be approved by the Board of Health per Section 5.0, and

C. An Operating Permit, as required in Section 11, shall be required for the life of the system.

18.9 Other Treatment Systems

A. Treatment systems other than those discharging through a soil treatment area or sand filter system shall meet the requirements of Section 43.12.H of Regulation 43, and

B. Shall be approved by the Board of Health per Section 5.0, and

C. Shall only be allowed on agriculturally zoned land of parcels greater than forty (40) acres, and

D. An Operating Permit, as required in Section 11, shall be required for the life of the system. Monitoring as required in Section 11 shall be a condition of the Operating Permit and it may be revoked by the Department for non compliance.

This Page Intentionally Left Blank

19.0 Responsibility

A. The owner shall be responsible for maintenance of an OWTS unless the responsibility has been contractually assigned to a tenant or a third party or a public, quasi-public, or political subdivision.

B. Any person denying responsibility for the proper operation and maintenance of an onsite wastewater treatment system shall bear the burden of proof for such denial upon establishment of ownership or possessory rights for the property served by the system.

19.1 Maintenance and Cleaning

Unless required as a condition of approval (ex. Use Permit-Section 10) or set forth in an operating permit (Section 11), the following inspection and maintenance schedule is recommended for all onsite wastewater treatment systems to ensure good working order.

Table 19-1 MAINTENANCE RECOMMENDATIONS

TYPE OF SYSTEM	INSPECTION OR MAINTENANCE	CLEANED OR PUMPED
Septic tanks	Annually	Sludge depth >18-inches*
Vaults, vaulted privies	Annually	At 75 percent capacity
Aeration or mechanical units	Per Operating Permit Conditions	
New Technology Devices	Per Permit conditions or Operating Permit conditions	

* Generally every 2-4 years depending on occupancy and tank size.

19.2 Monitoring and Sampling

A. For an OWTS for which monitoring of effluent is required, the Department, or delegated third party, shall collect and test effluent samples to ensure compliance with the provisions of these Regulations. Such a requirement for monitoring would be stated on construction permit, operating permit or both.

B. Sampling may be required by the Department in conjunction with an enforcement action or investigation.

C. Any owner or occupant of property on which an OWTS is located may request the Department to collect and test an effluent sample from the system. The Department may perform such collection and testing services. The owner or occupant shall pay for these services.

D. If the Department or a delegated third party collects and tests effluent samples, a fee not to exceed that which is allowed by the OWTS Act may be charged for each sample collected and tested. Payment of such charge shall be stated in the permit as a condition for continued use of the system.

E. Conditions when the Department can require routine monitoring include:

1. Indications of inadequate performance;

2. Location in sensitive areas;

3. Systems not relying on a STA;

4. Experimental systems; and/or

5. Systems under product development permits.

F. Sampling and analysis shall be performed according to American Public Health Association, American Water Works Association, and Water Environment Federation: Standards Methods for the Examination of Water and Wastewater, 21st edition.

19.3 Disposal of Waste Materials

Disposal of waste materials (excluding liquid wastes and sludge) removed from a system in the process of maintenance or repair may be accomplished at the site in a manner that complies with State and local regulations, provided it does not create a hazard to the public health, a nuisance, or risk of pollution of surface or ground water. Liquid wastes and sludge shall be removed by a Systems Cleaner for proper disposal.

19.4 Termination of Use of System

A. A septic tank, vault or holding tank shall be abandoned in the following manner:

1. A tank may be completely removed and the parts disposed of safely.

2. If the tank will remain in place:

a. Electrical lines, if present, shall be removed;

b. The inlet and outlines shall be capped or removed;

c. The tank shall be pumped to remove as much waste as possible;

d. The bottom of the tank shall be broken so the tank neither floats nor fills with water;

e. The top shall be collapsed and the sides may be broken into the void;

f. The remaining void shall be filled with gravel, sand or compacted soil; and

g. The filled excavation will be graded to surroundings, allowing for settling, and re-vegetated.

B. An absorption bed or trench, mound, or evaporation system may be abandoned in place by disconnecting and capping the inlet line.

C. A seepage pit, cesspool or other system that contains a large internal void shall be abandoned by pumping out the liquid contents, capping or removing the inlet line, then either collapsing the void or filling with soil or other inert materials to prevent subsidence or collapse.

D. A non-vaulted privy shall be abandoned by pumping any liquid material from the privy pit, treatment with quicklime or other disinfectant, then back-filling the pit with soil or inert materials. The privy structure may remain in place provided that a solid floor is placed in the structure.

E. The Department may require abandonment of a tank or other system component that is deemed to be a hazard.

This Page Intentionally Left Blank.

1.0 Setback Requirements

A. Horizontal distances from the various components of a system to pertinent terrain features shall be in accordance with Table A-1.

B. Where soil, geological or other conditions warrant, greater distances may be required by the Board of Health or by the Water Quality Control Commission pursuant to §25-8-206, C.R.S. and applicable regulations.

C. For repairs to existing OWTS where the size of lot precludes adherence to these distances, the proposed STA shall not be closer to setback features than the existing OWTS, as reviewed and approved by the Department per Section 5.0.

2.0 Modifications and Reductions

A. All requests for distance setback modifications shall be analyzed and approved by the Department and be in complete compliance with the variance procedures of these Regulations. Acceptable methods of analyzing horizontal separation distances with higher treatment levels include but are not limited to:

1. Analyzing the intended uses of impacted surface and/or ground waters;

2. Contacting adjacent property owners for potential conflicts with property line encroachments; and

3. Analyzing potential impacts that system locations may have on building foundations and other potentially affected features.

B. Reductions in separation distances with higher level treatment shall include provisions for operation and maintenance for the life of the system, as described in Section 11.

3.0 Dry Gulches, Cut Banks and Fill Areas

A. Separation distances to dry gulches, cut banks and fill areas in Table A-1 shall apply unless the designer or design engineer determines by observation of the exposed slope of the dry gulch or cut bank or by profile holes or soil profile test pit excavations that a restrictive layer is present that will direct or allow the effluent from the soil treatment area to move laterally and surface.

B. A lesser distance may be used if it can be demonstrated by a professional engineer or professional geologist that the use of a barrier, such as a minimum 30 mil PVC liner placed between the soil treatment area and the slope of the dry gulch, cut bank or fill area will prevent effluent surfacing laterally.

C. The separation distance between a component and the crest of a dry gulch or cut bank shall be evaluated for potential erosion or slope instability if the component and the slope are too close

together. If there is potential for erosion or instability, the separation distance shall be increased until the risk is minimized.

D. Components of an OWTS listed in Table A-1 shall be installed or located in accordance with the minimum distance requirements provided in this table.

Table A-1 Minimum Horizontal Distances in Feet Between Components of an OWTS and Water, Physical and Health Impact Features

	Well, Potable Spring' Infiltration Gallery, Suction Line	Potable Water Supply Line	Potable Water Cistern	Dwelling Occupied Building	Property Lines, Piped or Lined Irrigation Ditch	Subsurface Drain, Intermittent Irrigation Lateral, Drywell, Stormwater Infiltration Structure	Surface Water (Lake, Water Course, Irrigation Ditch, Stream, Wetland)	Dry Gulch, Cut Bank, Fill Area (from Crest)	Septic Tank
Septic Tank, Higher Level Treatment Unit, Dosing Tank, Vault	50[1]	10[1]	25	5	10	10	50	10	--
Building Sewer or Effluent Lines	50[1]	10[1]	25[1]	0	10[1]	10[1]	50[1]	10[1]	--
STA Trench, STA Bed, Unlined Sand Filter, Sub-surface Dispersal System, Seepage Pit	100[2,5]	25[1]	25	20	10	25	50[2,3]	25[4]	5
Lined Sand Filter	60	10[1]	25	15	10	10	25	10	5
Outside of Berm of Lined Wastewater Pond	60	10[1]	25	15	10	10	50	10	5
Unlined Sand Filter in Soil With a Percolation Rate Slower than 60 MPI or System Not Relying on STA for Treatment (other than aerosol)	100	25[1]	25	15	10	25	25	15	10
Vault Privy	50	10[1]	25	15	10	10	25	10	--
Existing Pit Privy	100	50[1]	25	N/A	25	25	100	25	N/A
Aerosol Dispersal Methods	100[2]	10[1]	50	125	10	0	25[2]	10	10

NOTE: The minimum distances shown above must be maintained between the OWTS components and the features described. For repair or upgrading of existing OWTS where the size of lot precludes adherence to these distances, a repaired OWTS shall not be closer to setback features than the existing OWTS, as reviewed and approved by the local public health agency (Sections 5.0.C &16.18). Components that are not watertight should not extend into areas of the root system of nearby trees.

TABLE NOTES

1. Crossings or encroachments may be permitted at the points as noted above provided that the water or wastewater conveyance pipe is encased for the minimum setback distance on each side of the crossing. A length of pipe shall be used with a minimum Schedule 40 rating of sufficient diameter to easily slide over and completely encase the conveyance. Rigid end caps of at least Schedule 40 rating shall be glued or secured in a watertight fashion to the ends of the encasement pipe. A hole of sufficient size to accommodate the pipe shall be drilled in the lowest section of the rigid cap so that the conveyance pipe rests on the bottom of the encasement pipe. The area in which the pipe passes through the end caps shall be sealed with an approved underground sealant compatible with the piping used.

2. Except for systems with effluent that meets TL3N, add eight feet additional distance for each 100 gallons per day of design flows between 1,000 and 2,000 gallons per day, unless it can be demonstrated by a professional engineer or geologist by a hydrologic analysis or the use of a barrier, consisting of a minimum 30 mil PVC liner or equivalent, that contamination will be minimized.

3. Minimum setback of:
   a. 25 feet permitted for systems receiving TL2N, TL3 and TL3N effluent.

4. Minimum setback of 10 feet permitted for systems receiving TL2N, TL3 and TL3N effluent.

5. Minimum setback of 75 feet permitted for ONSITE well to STA for systems receiving TL3N effluent. Prior to approval, all setback distance reductions to the 75 foot requirement for wells and STA's must be in full compliance with the minimum standards and variance requirements of the State of Colorado Division of Water Resources: Rules and Regulations for Water Well Construction, Pump Installation, Cistern Installation, and Monitoring and Observation Hole/Well Construction.

This Page Intentionally Left Blank.

	WASTEWATER FLOWS AND STRENGTH	**Appendix B**

1.0 Estimates of Wastewater Flow

Appendix B to be used in conjunction with Section 13 to determine flows.

The table in this section provides standardized estimates of wastewater flows and strength from various facilities. Actual, documented flows from similar facilities may be used for design purposes if they meet the requirements of Section 13.3. Flow from facilities not referenced in this table shall be as set forth in Regulation 43, Table 6-2.

Table B-1 – Residential Wastewater

RESIDENTIAL WASTEWATER (per person unless otherwise noted)	**GPD**	**BOD_5 (lbs per day)**
Single Family Dwelling	75	.20
Multiple-family dwellings or apartments	75	.20
Mobile home (per person)	75	.20
Mobile home park (per space)	300	.80
Hotels and motels per room without private baths	50	.15
Hotels and motels per room with private baths	75	.15
Boarding and rooming houses	50	.15
RESIDENTIAL WASTEWATER (per fixture)		
Water closet	24.8	.029
Clothes washer	19.5	.037
Bath/shower	14.7	.014
Kitchen sink*	5.8	.052
Lavatory	8.4	.021
Dishwasher	1.8	.002

**includes garbage disposal*

Table B-3 – Commercial Wastewater

COMMERCIAL WASTEWATER	**GPD**	**BOD_5 (lbs per day)**
Facilities with short-term or transient visitors such as fairgrounds per person attending; ball parks, race tracks, stadiums, theaters or auditoriums, per seat	5	.02
Barber and beauty shops, per chair	100	.70*
Country club, per member	30	.02
County club, per employee	20	.06
Dental offices, per non-wet chair	50	.14*
Medical offices, per doctor	250	.80*
Factories and plants exclusive of industrial wastewater, per employee per eight-hour shift – no showers	20	.05
Factories and plants exclusive of industrial wastewater, per employee per eight-hour shift - showers provided	35	.08
Kennels, per run	30	.20

Laundries, self-service, per commercial washer	400	.75
Office buildings, per employee per eight-hour shift	15	.06
Service stations, per toilet fixture	250	.50*
Stores and shopping centers, per square foot of retail space	.1	.01*
FOOD SERVICE ESTABLISHMENTS	**GPD**	**BOD_5 (lbs. per day)**
Restaurant open 1 or 2 meals, per seat	50	.06/meal
24-hour restaurant, per seat	75	.07/meal served
Restaurant with paper service only, per seat	25	.01/meal served
Additional for bars and cocktail lounges, per seat	30	.02
Drive-in restaurant, per car space	50	.02
INSTITUTIONS W/O KITCHENS UNLESS OTHERWISE NOTED	**GPD**	**BOD_5 (lbs per day)**
Religious institutions, per person	5	.01
Hospitals, per bed space	250	.20
Nursing homes, per bed space	100	.17
Schools, Day, without cafeteria, gym or showers	15	.04
Schools, Day, with cafeterias, no gym or showers	20	.08
Schools, Day, with cafeterias, gym and showers	25	.10
Schools, Day, additional for employees	15	.06
RECREATIONALAND SEASONAL FACILITIES	**GPD**	**BOD_5 (lbs per day)**
Camps, day, no meals served	15	.12
Luxury resort, per person	125	.17
Resort night and day, per person	50	.12
Campground, per campsite**	50	.12
Public park flush toilet, per fixture per operating hour	36	.04 lbs./ fixture
Public park urinal, per fixture per operating hour	10	.01 lbs./fixture
Public park shower, per fixture per operating hour	100	.10 lbs./ fixture
Public park faucet, per fixture per operating hour	15	.04 lbs./ fixture
Swimming pools and bathhouses, per user	10	.06
Travel trailer parks, per unit (water and sewage hookup)**	50	.12
Travel trailer park, per unit (no water and sewage)**	50	.12

*BOD_5 levels need further verification

**Laundry facilities, if provided, are to be calculated on a per commercial washer basis in accordance with other elements of this table

2.0 Multiple Flow Factors

For design purposes, estimates of sewage flow rates may require inclusion of several flow factors from the above table. Examples:

Daily sewage flow rate for a 30-run dog kennel with three (3) employees would be calculated as follows:

30 runs x 30 gal / run / day	=	900	gpd
3 employees x 15 gal / employee / day	=	+45	gpd
TOTAL DAILY SEWAGE FLOW		**945**	**GPD**

Daily sewage flow rate for a 2,000 sq. ft. retail store with 5 employees and public restrooms would be calculated as follows:

2,000 sq. ft x 0.1 gal / sq. ft. / retail space=	200	gpd
5 employees x 15 gal / employee / day=	+75	gpd
TOTAL DAILY SEWAGE FLOW	**245**	**GPD**

This Page Intentionally Left Blank

Long Term Acceptance Rates (LTARs)

Appendix C

Soil Type, Texture, Structure and Percolation Rate Range					Corresponding Long Term Acceptance Rate (LTAR) in gallons per sq. ft. per day				
Soil Type	USDA Soil Texture	USDA Soil Structure-Shape	USDA Soil Structure-Grade	Percolation Rate (MPI)	Treatment Level 1[1]	Treatment Level 2[1]	Treatment Level 2N[1]	Treatment Level 3[1]	Treatment Level 3N[1,3]
0	Soil Type 1 with more than 35 percent rock (>2 mm) and Soil Types 2-5 with more than 50 percent rock (>2 mm)	--	0 (Single Grain)	<5	1.0 (minimum 3-foot deep unlined sand filter required [2])	1.0 (minimum 2-foot deep unlined sand filter required [2])			
1	Sand, Loamy Sand	--	0	5-15	0.80	1.25[4]	1.25	1.40[4]	1.40
2	Sandy Loam, Loam, Silt Loam	PR (Prismatic) BK (Blocky) GR (Granular)	2 (Moderate) 3 (Strong)	16-25	0.60	0.90	0.90	1.00	1.00
2A	Sandy Loam, Loam, Silt Loam	PR, BK, GR 0 (none)	1 (Weak) Massive	26-40	0.50	0.70	0.70	0.80	0.80
3	Sandy Clay Loam, Clay Loam, Silty Clay Loam	PR, BK, GR	2, 3	41-60	0.35	0.50	0.50	0.60	0.60
3A	Sandy Clay Loam, Clay Loam, Silty Clay Loam	PR, BK, GR 0	1 Massive	61-75	0.30	0.40	0.40	0.50	0.50
4	Sandy Clay, Clay, Silty Clay	PR, BK, GR	2, 3	76-90	0.20	0.30	0.30	0.30	0.30
4A	Sandy Clay, Clay, Silty Clay	PR, BK, GR 0	1 Massive	91-120	0.15	0.20	0.20	0.20	0.20
5	Soil Types 2-4A	Platy	1, 2, 3	121+	0.10	0.15	0.15	0.15	0.15

TABLE NOTES

1. Treatment levels are defined in Table 17-1
2. Unlined sand filters in these soil types shall provide pathogen removal. Design shall conform to Section 17.
3. Higher long-term acceptance rates for Treatment Level 3N may be allowed for OWTS required to have a discharge permit, if the capability of the design to achieve a higher long-term acceptance rate can be substantiated.
4. For sand filters and mounds, a maximum application rate of 1.0 gal/ft2/day when TL1 effluent is applied (Section 17).

Shaded areas require system design by a professional engineer.

This Page Intentionally Left Blank

SUMMARY of TREATMENT LEVEL OPTIONS

Appendix D

The installation of an OWTS providing higher level treatment as set forth in Table 13-2 and Section 17 allows for various distance reductions and other considerations, providing the engineer with a variety of options in the design and placement of such a system. These options are summarized below (TL1 is not considered higher level treatment but is provided for comparison purposes):

			Minimum Distance Setbacks in feet (from Appendix A)			Minimum separation in feet between STA infiltrative surface and bedrock or groundwater (from Table 16-3)		
Treatment Levels (from Table 13-3)	**Method of Dosing (See Section 15.12)**	**Operating permit (See Section 11)**	**STA to wells**	**STA to surface waters**	**STA to dry gulch**	**Standard bed or trench**	**Unlined Sand Filter**	**Mounded Sand Filter**
TL 1	Pump or siphon	NO	100	50	25	4 (3)[1]	4(3)[1]	2
TL2	Pressure Only	YES	100	50	25	4 (3)[1]	2[2]	2[2]
TL2N	Pressure Only	YES	100	25	10	2	2[2]	2[2]
TL3	Pressure Only	YES	100	25	10	2	2[2]	2[2]
TL3N	Pressure Only	YES	75[3]	25	10	2	2[2]	2[2]

TABLE NOTES

1. With pressure dosing
2. The bottom of the sand layer must be at or above the high groundwater surface or bedrock for installations in which effluent is percolated downward through the soil
3. Minimum setback of 75 feet permitted for ONSITE well to STA for systems receiving TL3N effluent. Prior to approval, all setback distance reductions to the 75 foot requirement for wells and STA's must be in full compliance with the minimum standards and variance requirements of the State of Colorado Division of Water Resources: Rules and Regulations for Water Well Construction, Pump Installation, Cistern Installation, and Monitoring and Observation Hole/Well Construction.

This Page Intentionally Left Blank.

REGULATORY CITATIONS and THIRD PARTY STANDARDS

Appendix E

The following is a summary of regulatory citations and third party standards as referenced in these Regulations.

CITATIONS FROM THE COLORADO REVISED STATUTES (C.R.S)					
CITATION	**Pages**	**CITATION**	**Pages**	**CITATION**	**Pages**
§12-25-1	*11*	**§25-8-201**	*4*	**§25-10-106 (1) (k)**	*34*
§18-1-107	*34*	**§25-8-206**	*101*	**§25-10-108 (1)**	*39*
§23-41-208	*11*	**§25-8-501**	*19*	**§25-10-108 (2)**	*39*
§24-4-105	*32*	**§25-8-702**	*19*	**§25-10-109 (1)**	*34*
§25-1-502	*3*	**§25-10-101**	*1, 10*	**§25-10-109 (2)**	*34*
§25-1-513	*32*	**§25-10-103 (12)**	*1*	**§25-10-113**	*43*
§25-8-101	*20*	**§25-10-106**	*34*	**§34-1-201**	*11*
§25-8-103	*6, 13-14*	**§25-10-106 (1) (h)**	*21*		
§25-8-103 (5)	*6*	**§25-10-106 (1) (j)**	*33*		

CITATIONS FROM THE CODE OF COLORADO REGULATIONS (CCR)					
CITATION	**Pages**	**CITATION**	**Pages**	**CITATION**	**Pages**
3 CCR 710-1	*64*	**5 CCR 1002-41**	*19*	**5 CCR 1002-61**	*19*
3 CCR 720-1	*4, 66*	**5 CCR 1002-42**	*19*	**5 CCR 1002-62**	*19*
5 CCR 1002-22	*19*	**5 CCR 1002-43**	*8, 11*	**5 CCR 1003-6**	*8*

REFERENCES TO THIRD PARTY STANDARDS					
STANDARD	**Pages**	**STANDARD**	**Pages**	**STANDARD**	**Pages**
AASHTOM252	*65*	**ASTMD 448**	*81*	**NSF 40**	*61*
AASHTOM43	*81*	**ASTMC 3034**	*65*	**NSF/ANSI46**	*67*
ASTMC33	*90*	**ASTMF405**	*65*	**NSF46**	*67*
ASTM1227-12	*69-70*	**IAMPO/ANSIZ1000-2007**	*69-70*	**NSF P 157**	*94*
				NSF245	*61*