1082576
Kathleen Neel – Summit County Recorder
16 Pages
5/18/2015 3:43 PM
DF: $0.00

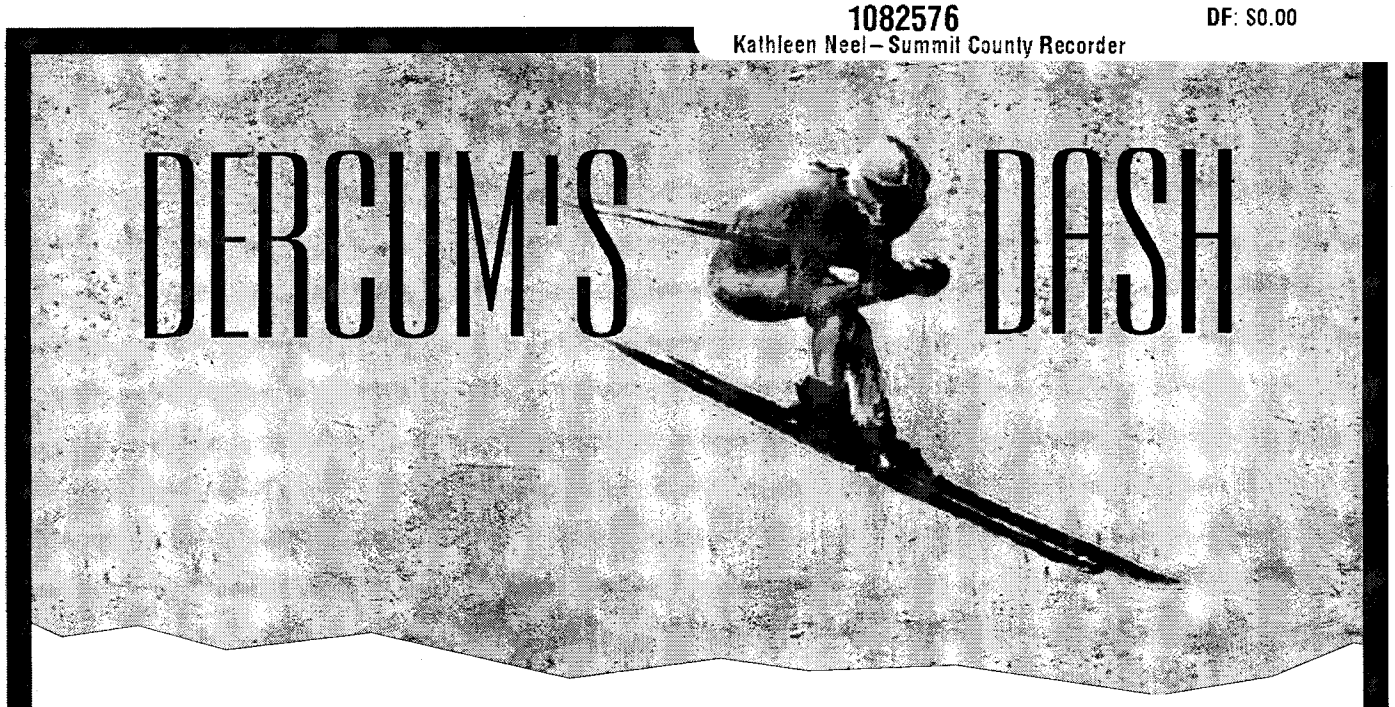

Signage Program

Prepared For:

Summit County Planning Department

0037 Peak One Drive

Frisco, Colorado 80443

Approval Date: September 18, 2014

Class 2 Minor Revision Submittal: May 5,2014

DHM DESIGN
900 S. Broadway
Suite 300
Denver, CO 80209
303.892.5566
www.dhmdesign.com

Contents

Narrative 3
Revised Narrative Describing Proposed Change 4
Vicinity Map 5
Site Plan 5
Schedule of Sign Types 6
Type A: Neighborhood Identification Sign Rendering 7
Type A: Neighborhood Identification Sign Planting Plan 8
Type A: Neighborhood Identification Sign Fabrication Details 9
Type B: Trail / Wayfinding Sign 10
Type B1: Clubhouse Sign 11
Type B1: Clubhouse Sign Planting Plan 12
Type C: Address Marker (Downhill Lots) Rendering 13
Type D: Address Marker (Uphill Lots) Rendering 14
Type C and D: Address Marker Typical Planting Plan 15
Type C and D: Address Marker Fabrication Details 16

Narrative

The intent of the Dercum's Dash signage program is to introduce way-finding and neighborhood identification signs that complement and enhance both the project and greater Keystone Resort community with high quality, aesthetically pleasing designs that are locally appropriate. The signs are in keeping with a mountain-rustic design vernacular, utilizing only high quality finish materials of real stone, wood and decorative steel brackets and hardware, in accordance with the material requirements outlined in Section 9201 of the Summit County sign regulations. Beyond its aesthetic appeal, the use of high quality materials and craftsmanship will ensure the signage's long-term weatherability in this extreme mountain environment. Special attention was given to designing signage that will be appropriately scaled for a high-end residential community. As such, the signs will achieve a tasteful and refined character, blending seamlessly with the neighborhood's architecture. Functionally, the signage is designed for clear readability from vehicles and pedestrians, with lettering scaled for legibility and clarity, using bronze pin-mounted letters in a clean, readable font on a light stone background. This approach ensures compliance with Section 9203 regarding sign readability.

Criteria for Decision Statement

The design team and property owner have endeavored to ensure that The Dercum's Dash signage program is consistent with the sign regulations outlined in Chapter 9 of the Summit County Land Use and Development Code and PUD for this property. The materials, color scheme, lettering and overall functionality of the signs are intended to complement this high quality project and fulfill the vision outlined in the PUD. All proposed signage is scaled appropriately for this residential community and carefully sited to achieve clear site lines and safe distances from vehicles, including snow removal and other maintenance vehicles. As shown on the drawings contained herein, all proposed lighting is consistent with the lighting regulations by using full cut-off sign luminaries that will obscure light source from view. The signage is designed to be visually unobtrusive in a manner compatible with the surrounding environment, with careful attention paid to their placement and grading of the surrounding landform. Ornamental planting consistent with the approved plant palette will be provided at the base of each sign to further ensure they are visually appealing and integrated into the overall landscape appearance of the neighborhood, which aims to blend as seamlessly as possible into the natural mountain environment.

Revised Narrative / Description of Proposed Change

The applicant's proposed minor revision to the Dercum's Dash Signage Program involves the design of the Neighborhood Identification Sign, identified as sign type A in the approved signage program dated 9/18/14. Specifically, the proposed design change involves the signage base only. The signage panel itself maintains the same materials, lettering and logo as shown in the approved signage program. The proposed change is to mount the sign panel on a curvilinear stone retaining wall, rather than suspending the sign panel from a timber cross beam, as detailed in the original sign program. Also, the stone column next to the sign panel, shown in the original design, will be removed. In this way, the proposed design change will result in a lower profile neighborhood identification sign with an overall smaller scale.

The proposed change will result in a neighborhood I.D. sign that is consistent with the overall goals and level of quality described in the approved signage program. The neighborhood I.D. sign will complement and enhance both the project and greater Keystone Resort community with a high quality, aesthetically pleasing design that is locally appropriate. The sign is in keeping with the overall mountain-rustic design vernacular, utilizing only high quality finish materials of real stone, in accordance with the material requirements outlined in Section 9201 of the Summit County sign regulations. The proposed change ensures that the sign will be appropriately and tastefully scaled for this high-end residential community. Functionally, the sign is designed for clear readability from vehicles and pedestrians, with lettering scaled for legibility and clarity, using bronze pin-mounted letters in a clean, readable font on a light stone background. This approach ensures compliance with Section 9203 regarding sign readability.

INDEPENDENCE RD

ALDERS LANE

WEST TRADE COURT

EAST TRADE COURT

Pedestrian Trail

Clubhouse

1 2 3 4 5 6 7 8 9 10 11 12 13 14 15 16 17 18 19 20 21 22 23 24

Site Plan

N.T.S.

KEY

- Ⓐ Neighborhood Identification
- Ⓑ Trail Sign
- Ⓑ1 Clubhouse Sign
- Ⓒ Address Markers (Downhill Lots)
- Ⓓ Address Markers (Uphill Lots)
- Stop Sign
- No Outlet Sign
- Street Name / Stop Sign
- Speed Limit Sign

DERCUM'S DASH

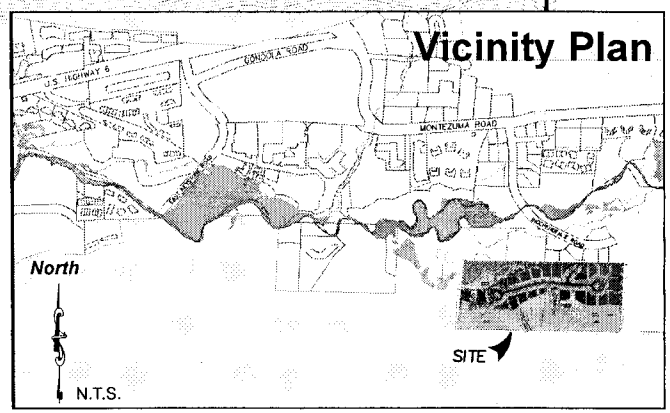

Schedule of Sign Types

Sign Type	Description	Location	Max. Height	Lighting	Max. Number
A	Neighborhood Identification	East side of Alders Lane, adjacent to Tract A	6'-6" 3'-1 3/4"(Sign Panel)	LED Strip Light	1
B	Trail Sign	West side of cul-de-sac at end of West Trade Court, adjacent to Lot 23	5'-4"	None	1
B1	Clubhouse Identification	Identical to Trail Sign, with lettering to identify Clubhouse	5'-4"	(2) Adjustable LED sign light	1
C	Address Marker (Uphill Lots)	Front of driveway, outside of R.O.W. and snow plow zone	5'-0"	(1) Adjustable LED sign light	9
D	Address Marker (Downhill Lots)	Front of driveway, outside of R.O.W. and snow plow zone	5'-0"	(1) Adjustable LED sign light	14

Note: Regulatory and directional signage shall be MUTCD compliant.

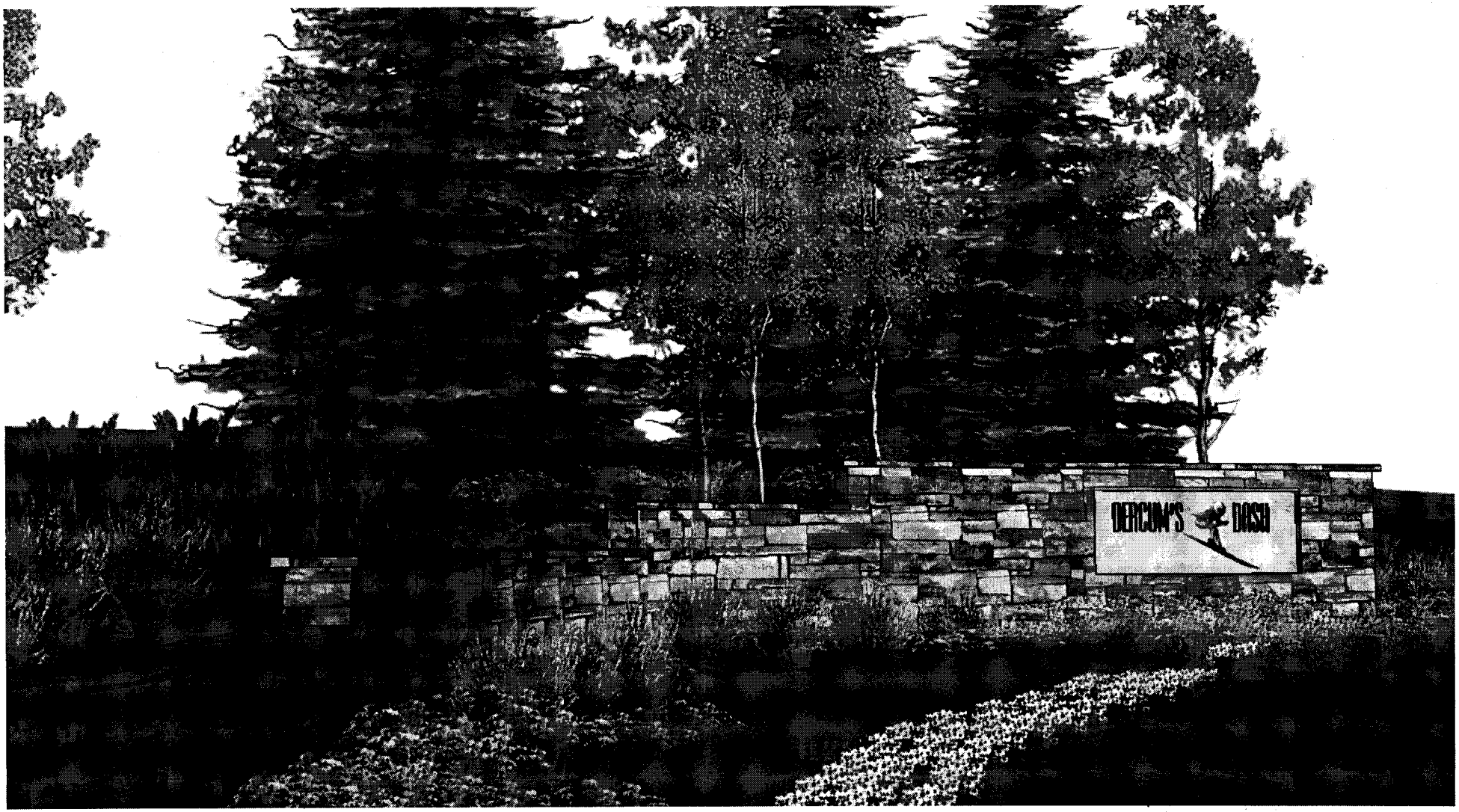

Type A: Neighborhood Identification

DERCUM'S DASH

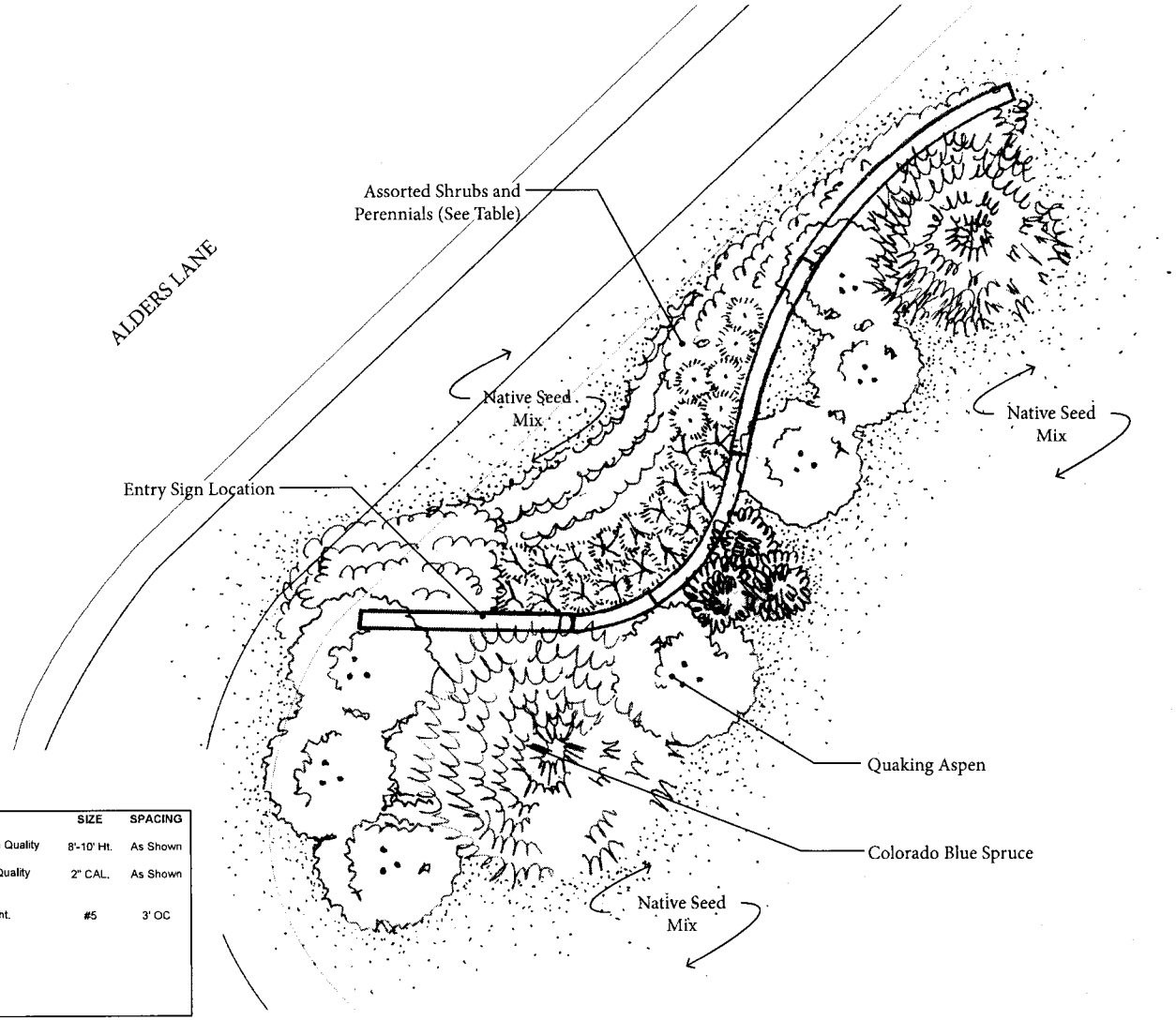

Note: Automated irrigation system will be installed and maintained for all landscape improvements.

PLANT SCHEDULE

#	SYMBOL	COMMON_NAME	BOTANIC_NAME	COMMENTS	SIZE	SPACING
EVERGREEN TREES						
	CBS	Colorado Spruce	Picea pungens	B&B, Full form, Guyed, Specimen Quality	8'-10' Ht.	As Shown
DECIDUOUS TREES						
	QA	Quaking Aspen	Populus tremuloides	B&B, Clump, Staked, Specimen Quality	2" CAL.	As Shown
SHRUBS						
	CLK	Canadian Lilac	Syringa x prestoniae 'Miss Canada'			
	MSA	Mountain Spirea	Spiraea splendens	Container, 5 canes min., 18"-24" ht.	#5	3' OC
	PCR	Peking Cotoneaster	Cotoneaster lucidus			
	PTA	Jackman Potentilla	P. fruticosa 'Jackmanii'			
Perennials						
	AQA	Rocky Mountain Columbine	Aquilegia hybrids			
	GDA	Blanket Flower	G. aristata			
	LPS	Russel Hybrids Lupine	Lupinus 'Russell Strain'			

Type A: Neighborhood I.D. Planting Plan

DERCUM'S DASH

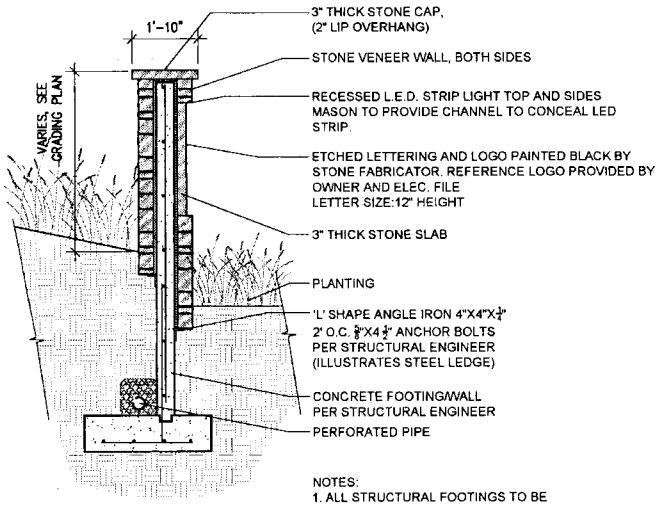

NOTES:
1. ALL STRUCTURAL FOOTINGS TO BE APPROVED BY CERTIFIED STRUCTURAL ENGINEER.
2. PROVIDE SHOP DRAWINGS FOR APPROVAL PRIOR TO FABRICATION.
3. PROVIDE SAMPLES OF MATERIALS AND PRODUCTS FOR APPROVAL PRIOR TO INSTALLATION.
4. PROVIDE ELECTRICAL STUB OUT FOR STRIP LIGHT.

01 ENTRY SIGN WALL DETAIL SECTION

NOT IN SCALE

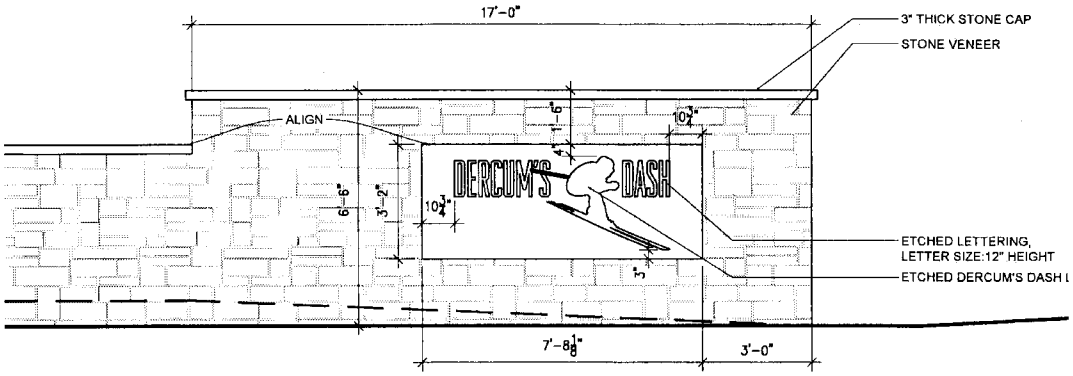

02 ELEVATION

NOT IN SCALE

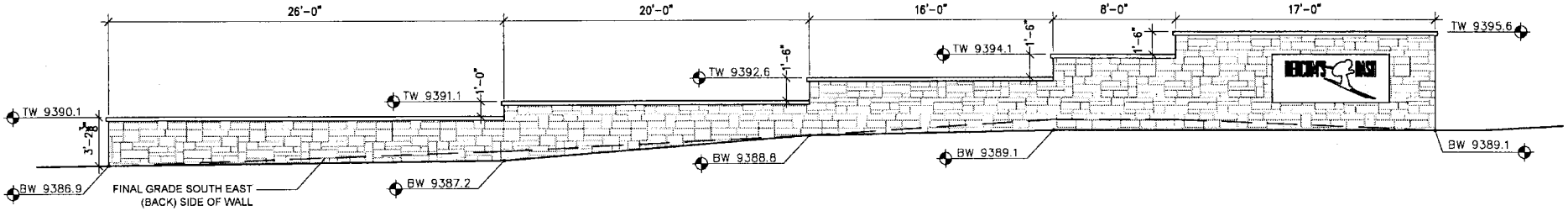

03 ELEVATION

NOT IN SCALE

Type A: Neighborhood Identification

DERCUM'S DASH

PERSPECTIVE VIEW

01

NOTES

1. ALL STRUCTURAL FOOTINGS TO BE APPROVED BY CERTIFIED STRUCTURAL ENGINEER.

2. SUPPLY SHOP DRAWINGS OF SIGN FOR APPROVAL PRIOR TO FABRICATION.

3. CONCEAL ALL ELECTRICAL CONDUITS NECESSARY FOR SIGN LIGHTS.

4. SUBMIT SAMPLES OF MATERIALS AND PRODUCTS FOR APPROVAL PRIOR TO INSTALATION.

5. SIGN TEXT: "PUBLIC TRAIL TO GONDOLA AND BASE VILLAGE."

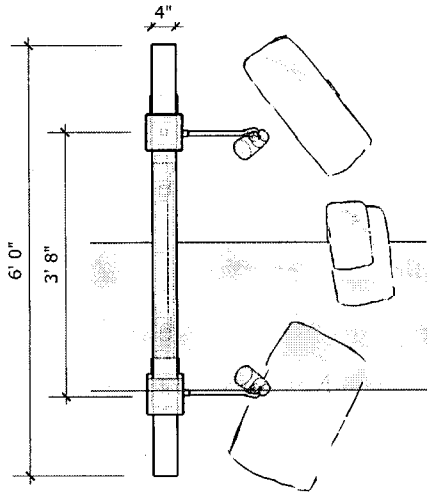

PLAN

02

SCALE: 1" = 20'

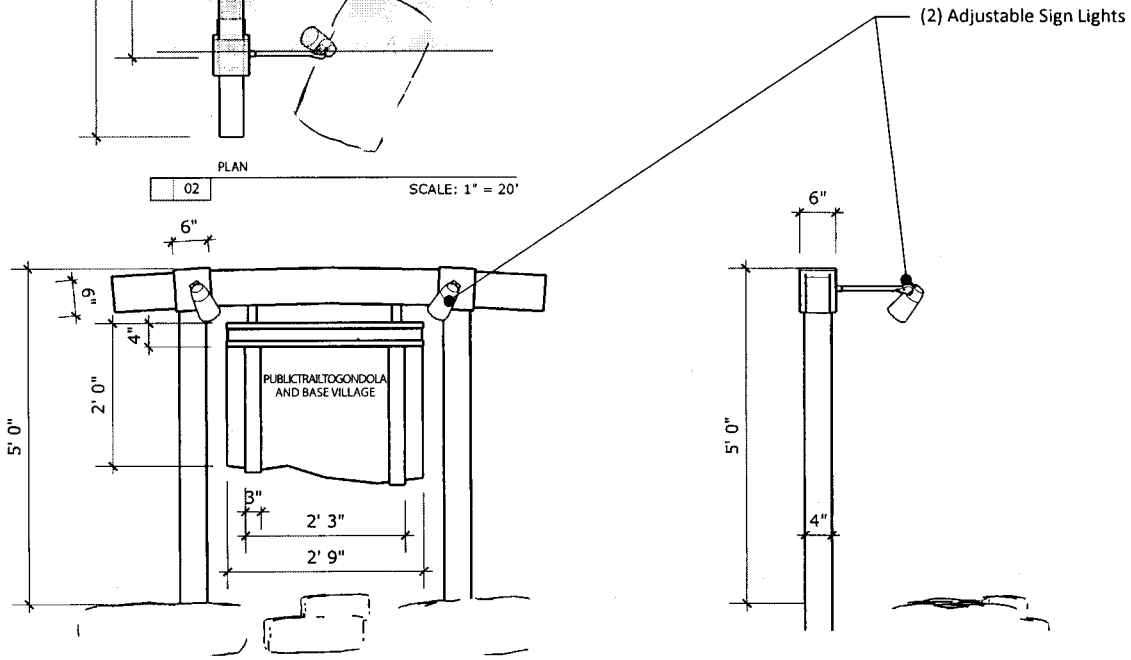

ELEVATION - FRONT & SIDE

03

SCALE: 1" = 20'

Type B: Trail / Wayfinding Sign

DERCUM'S DASH

PERSPECTIVE VIEW

01

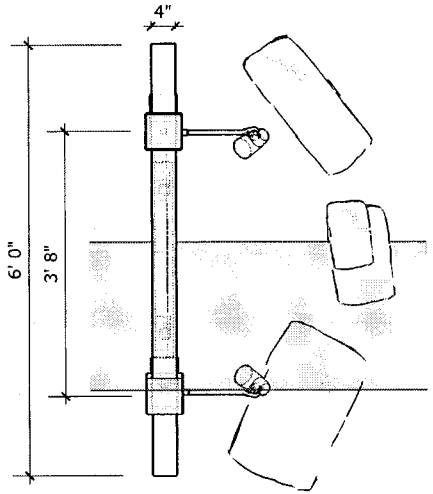

PLAN

02

SCALE: 1" = 20'

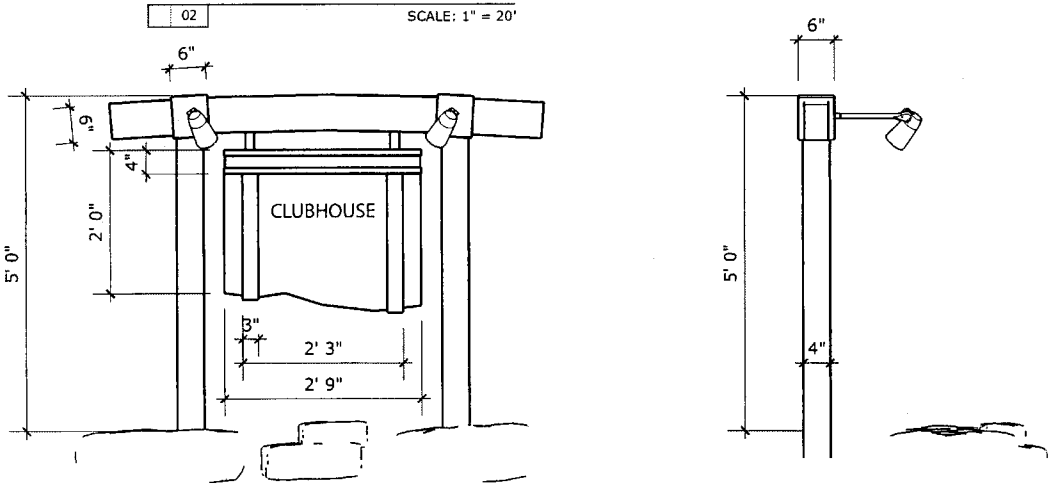

ELEVATION - FRONT & SIDE

03

SCALE: 1" = 20'

NOTES

1. ALL STRUCTURAL FOOTINGS TO BE APPROVED BY CERTIFIED STRUCTURAL ENGINEER.

2. SUPPLY SHOP DRAWINGS OF SIGN FOR APPROVAL PRIOR TO FABRICATION.

3. CONCEAL ALL ELECTRICAL CONDUITS NECESSARY FOR SIGN LIGHTS.

4. SUBMIT SAMPLES OF MATERIALS AND PRODUCTS FOR APPROVAL PRIOR TO INSTALATION.

5. SIGN TEXT: "CLUBHOUSE"

Type B1: Clubhouse Sign

DERCUM'S DASH

Note: Planting plan indicates design intent and general placement of sign in relation to entry drive and cul-de-sac. Signage will be placed outside of R.O.W.

Final location of drive will be determined when clubhouse architecture is developed and building located.

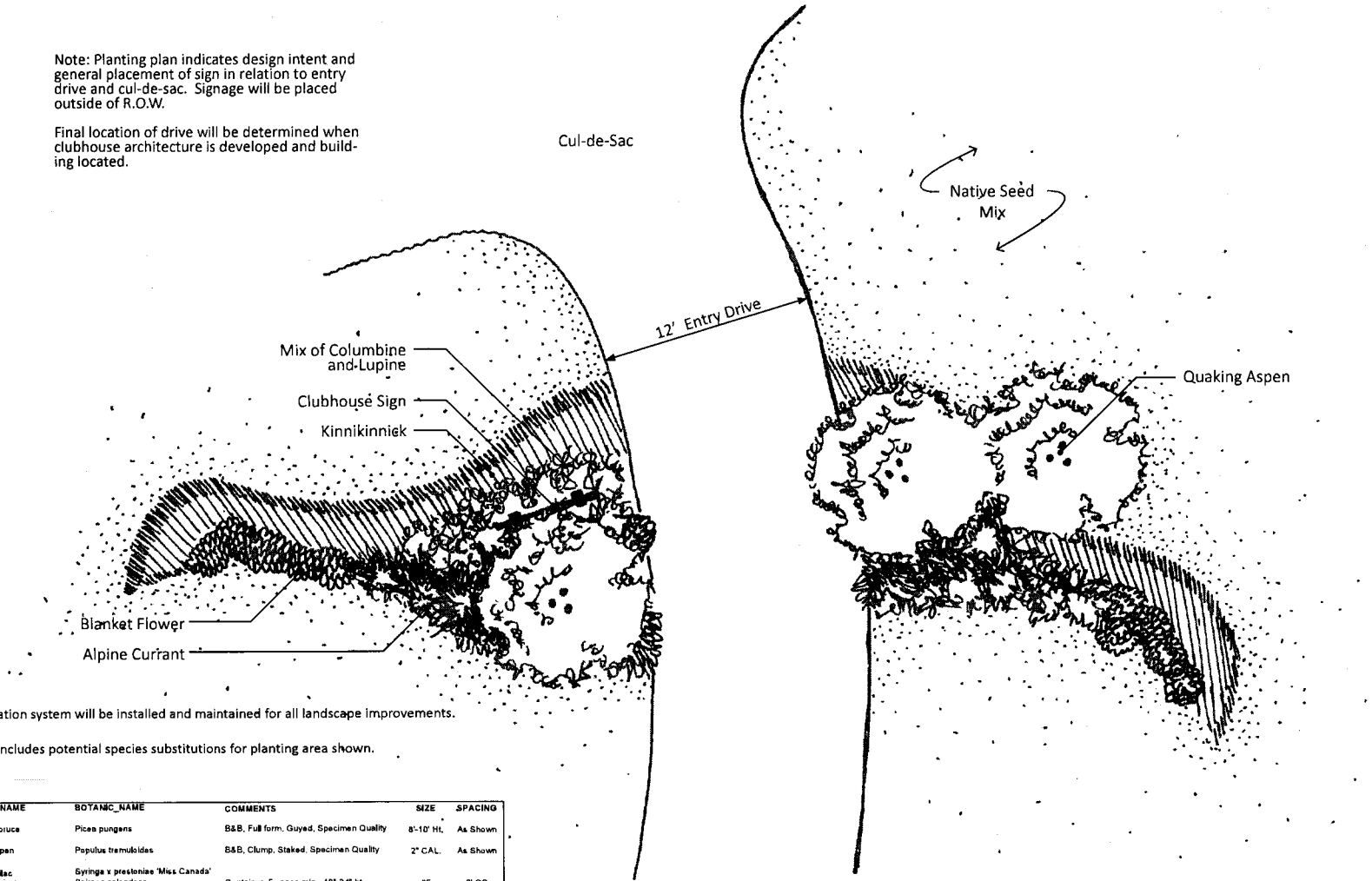

Scale: 1" = 10'-0"

Note: Automated irrigation system will be installed and maintained for all landscape improvements.

Plant schedule below includes potential species substitutions for planting area shown.

PLANT SCHEDULE

#	SYMBOL	COMMON_NAME	BOTANIC_NAME	COMMENTS	SIZE	SPACING
EVERGREEN TREES						
	CBS	Colorado Spruce	Picea pungens	B&B, Full form, Guyed, Specimen Quality	8'-10' Ht.	As Shown
DECIDUOUS TREES						
	QA	Quaking Aspen	Populus tremuloides	B&B, Clump, Staked, Specimen Quality	2" CAL.	As Shown
SHRUBS						
	CLK	Canadian Lilac	Syringa x prestoniae 'Miss Canada'			
	MSA	Mountain Spirea	Spiraea splendens	Container, 5 canes min., 18"-24" ht.	#5	3' OC
	PCR	Peking Cotoneaster	Cotoneaster lucidus			
	PTA	Jackman Potentilla	P. fruticosa 'Jackmanii'			
	SWN	Summer Wine Ninebark	P. opulifolius 'Seward'			
Perennials						
	AQA	Rocky Mountain Columbine	Aquilegia hybrids			
	GDA	Blanket Flower	G. aristata			
	LPS	Russel Hybrids Lupine	Lupinus 'Russell Strain'			

Type B1: Clubhouse Sign Planting Plan

DERCUM'S DASH

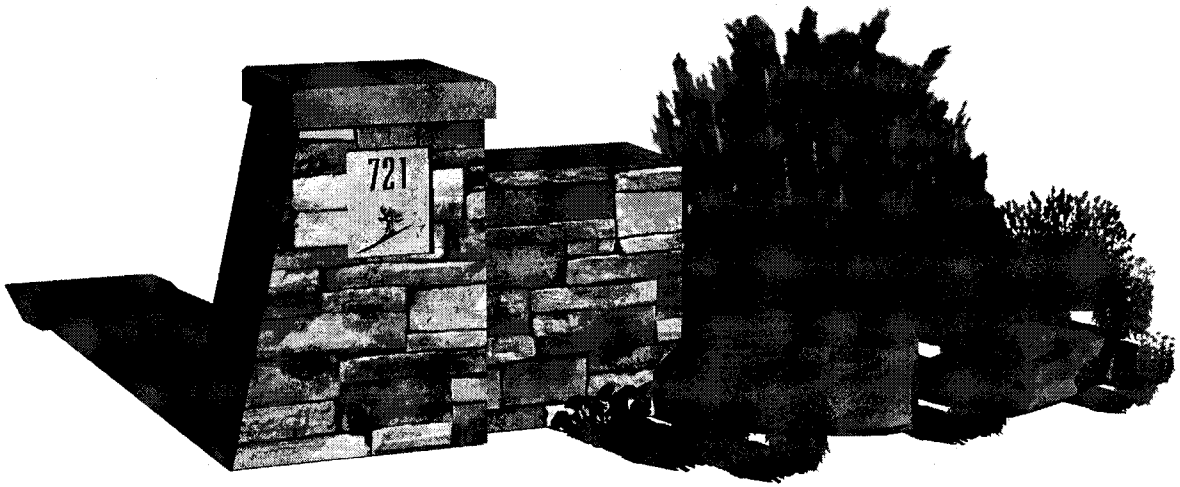

Type C: Address Marker (Downhill Lots)

DERCUM'S DASH

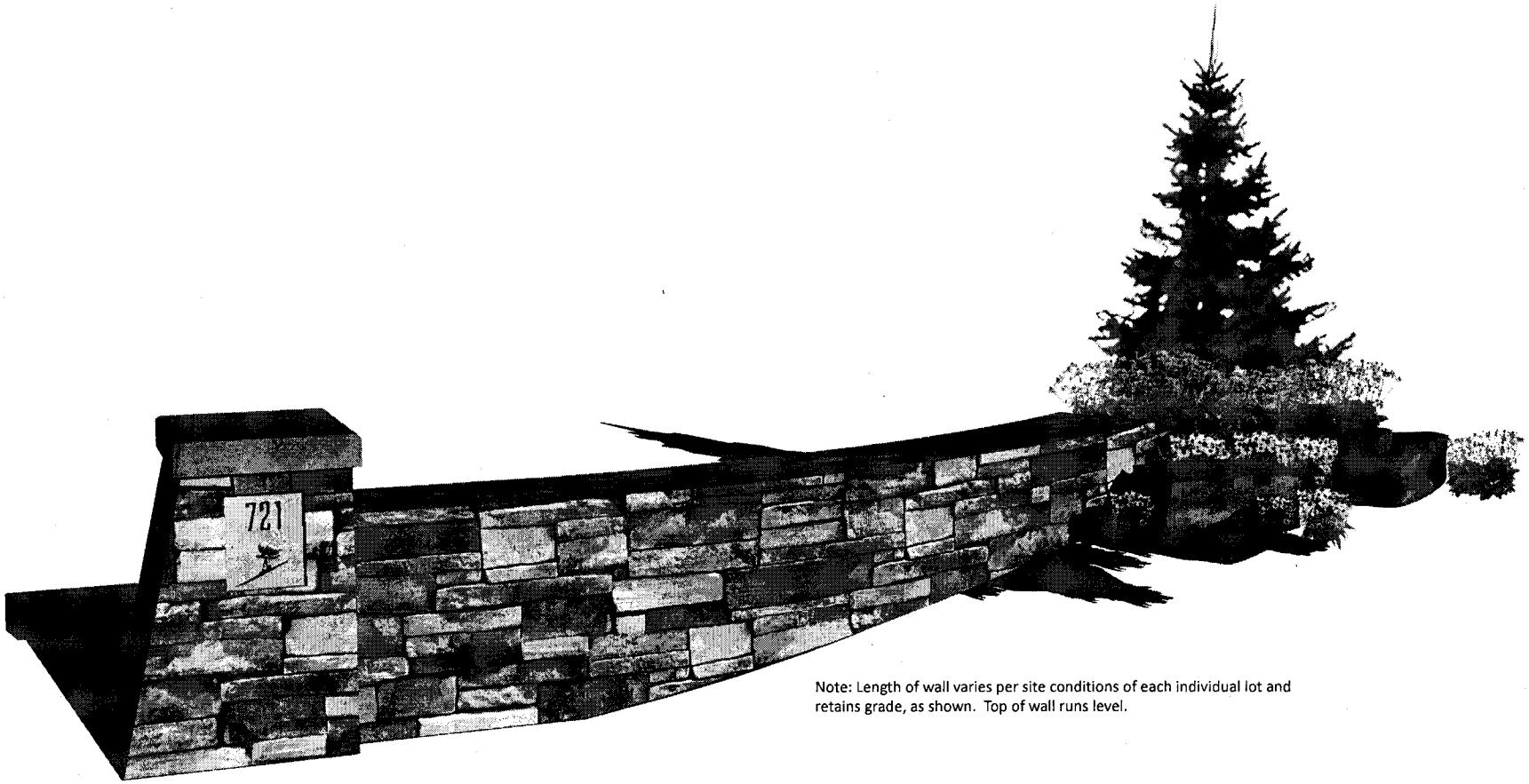

Note: Length of wall varies per site conditions of each individual lot and retains grade, as shown. Top of wall runs level.

Type D: Address Marker (Uphill Lots)

DERCUM'S DASH

Note: Planting plan indicates design intent and general placement of sign in relation to entry drives. Extent of wall will vary on each lot due to particular site conditions and grading; however, all address monuments will be placed outside of R.O.W. and landscape improvements (plantings) will extend the full length of wall and blend with foundation plantings or other ornamental landscape for each house.

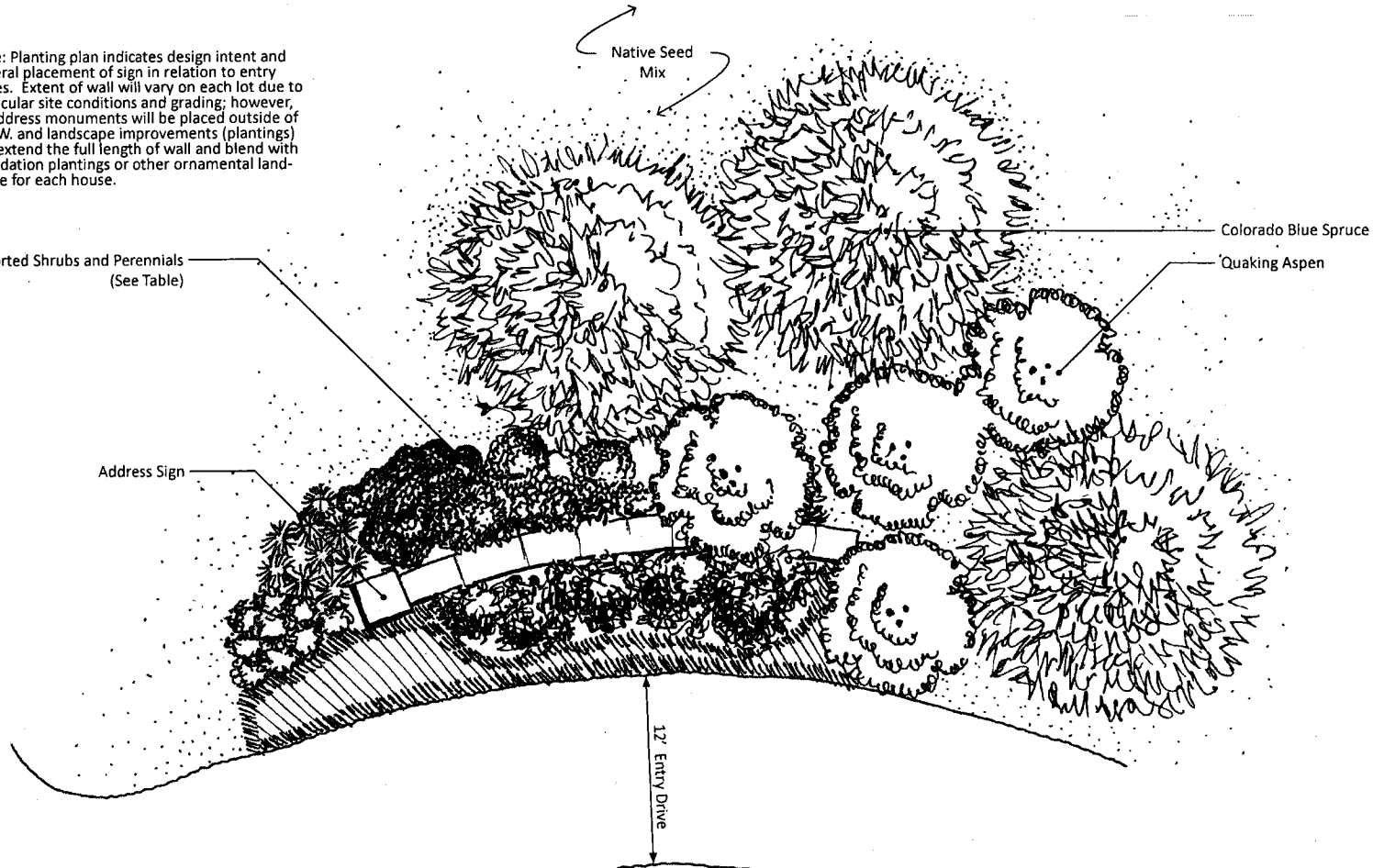

Note: Automated irrigation system will be installed and maintained for all landscape improvements.

Plant schedule below includes potential species substitutions for planting area shown.

PLANT SCHEDULE

#	SYMBOL	COMMON_NAME	BOTANIC_NAME	COMMENTS	SIZE	SPACING
EVERGREEN TREES						
	CBS	Colorado Spruce	Picea pungens	B&B, Full form, Guyed, Specimen Quality	8'-10' Ht.	As Shown
DECIDUOUS TREES						
	QA	Quaking Aspen	Populus tremuloides	B&B, Clump, Staked, Specimen Quality	2" CAL.	As Shown
SHRUBS						
	CLK	Canadian Lilac	Syringa x prestoniae 'Miss Canada'			
	MSA	Mountain Spirea	Spiraea splendens	Container, 5 canes min., 18"-24" ht.	#5	3' OC
	PCR	Peking Cotoneaster	Cotoneaster lucidus			
	PTA	Jackman Potentilla	P. fruticosa 'Jackmanii'			
	SWN	Summer Wine Ninebark	P. opulifolius 'Seward'			
Perennials						
	AQA	Rocky Mountain Columbine	Aquilegia hybrids			
	GDA	Blanket Flower	G. aristata			
	LPS	Russel Hybrids Lupine	Lupinus 'Russell Strain'			

Type C: Typ. Address Marker Planting Plan

DERCUM'S DASH

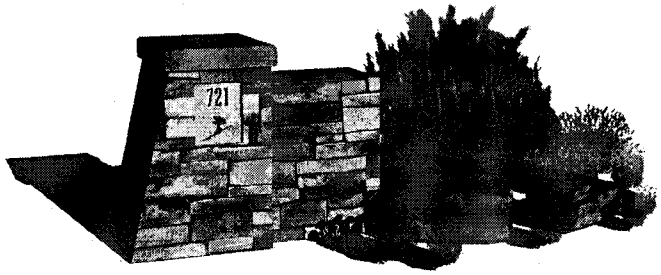

PERSPECTIVE VIEW

01

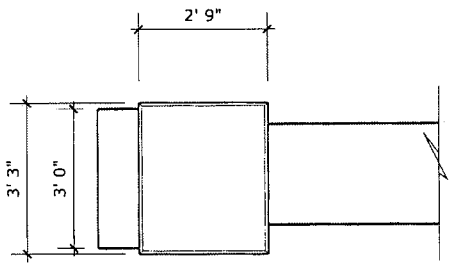

PLAN

02

SCALE: 1" = 30'

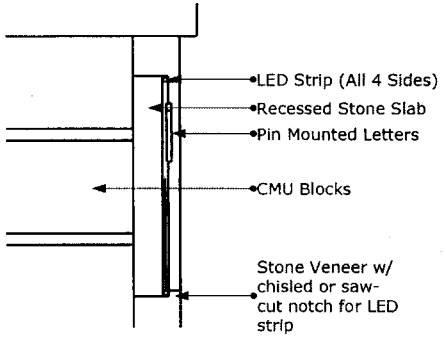

RECESSED PLATE SECTION

03

SCALE: 1" = 10'

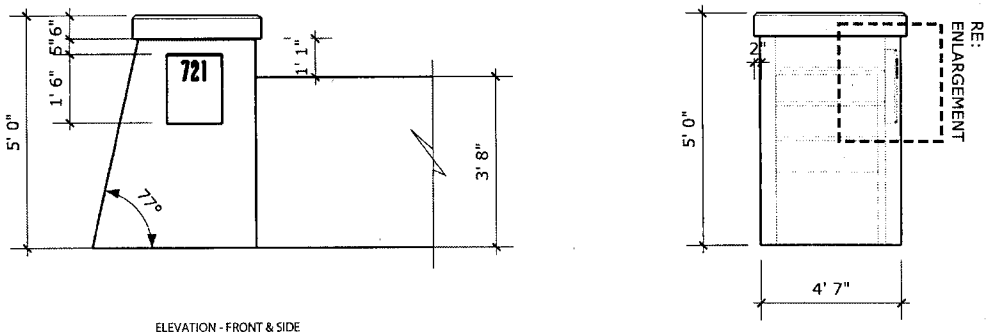

ELEVATION - FRONT & SIDE

04

SCALE: 1" = 30'

Type C and D: Address Marker Details

DERCUM'S DASH